T
353
.M44

NOTES FOR MECHANICAL DRAWING

FRANK E. MATHEWSON

Class T353
Book M44
Copyright No.

COPYRIGHT DEPOSIT.

NOTES FOR MECHANICAL DRAWING

Arranged for the use of the students of
THE MECHANIC ARTS HIGH SCHOOL
and THE EVENING SCHOOL OF TRADES

by

FRANK E. MATHEWSON

THE LIBRARY
OF CONGRESS

Springfield, Massachusetts
1904

T35
.M47

LIBRARY of CONGRESS
Two Copies Received
JAN 22 1904
Copyright Entry
Jan. 2-1904
CLASS a XXc. No.
7608
COPY B

Notes for Mechanical Drawing
Copyrighted, January 2, 1904
by Frank E. Mathewson

TMP96-024382

PREFACE

The Notes for Mechanical Drawing are the results of twelve years experience in teaching high school and evening classes, arranged to cover the subject from a practical point of view suggested by the careful observation of the needs of these classes. The book is not a text-book, but is simply a collection of notes, exercises, and problems, to be used in connection with such explanation or demonstration as, in the judgment of the instructor, seems best suited to the classes.

January 1, 1904 Frank E. Mathewson.

MARGINS :- *Tack the paper on the drawing board, and draw marginal lines as shown in the drawing below, obtaining a working space of 9″ × 12″. Use the T square for all horizontal lines, and the triangles in connection with the T square, for all vertical lines, and lines at 15°, 30°, 45°, 60°, and 75°.*

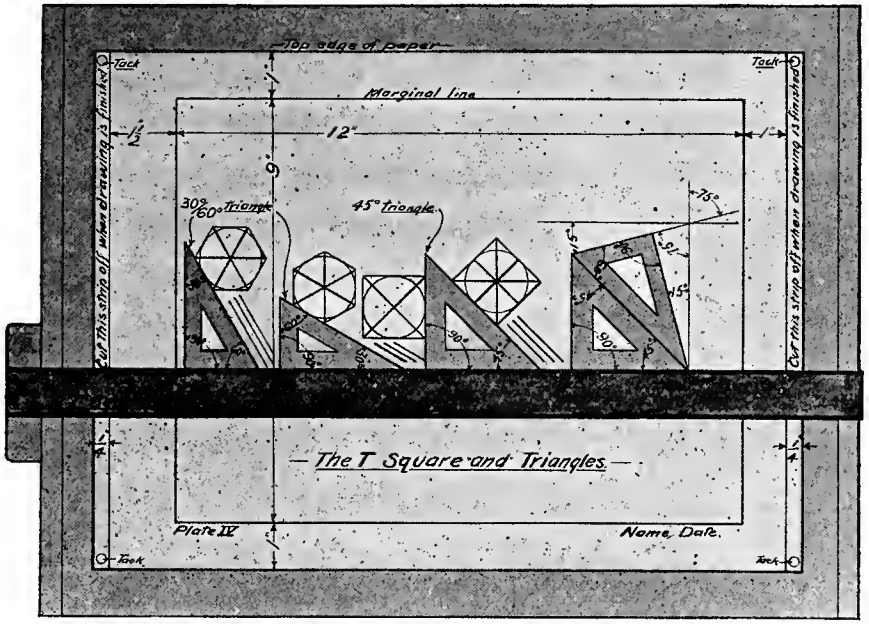

LETTERING. It is important that all lettering should be done quickly and neatly. Every drawing should have a title, and poor lettering spoils the effect of the whole drawing. A good style of letter to use is that given below. The size is determined by four lines one-sixteenth of an inch apart, and the letters slope 75°. Draw pencil guide lines for the letters, to insure uniform height.

The small letters are based on the circle, and a straight line tangent to the circle. Letters and figures used for notes and dimensions should be only one-eighth of an inch high. Letters should be made free-hand and first outlined in pencil.

When inking, use a writing pen with very little ink, and do not press on the pen enough to spread the points. Avoid shading the letters. Let the result be clean cut, well formed, properly spaced lettering.

LINES:- *When inking a drawing, the weight of a line is regulated by adjusting the screw at the side of the ruling pen. All lines should be of the weights shown below.*

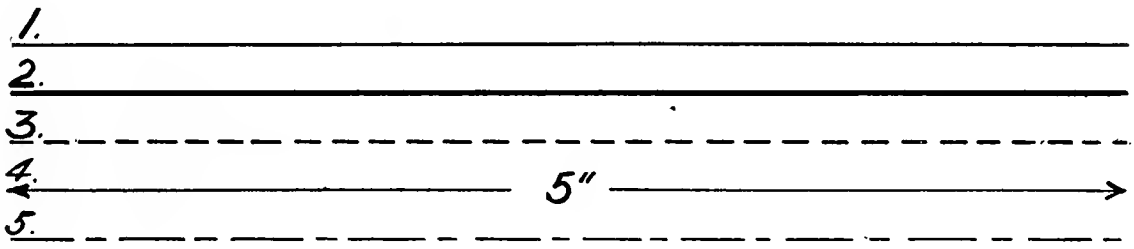

No. 1 is for all Visible Lines of the object represented by the drawing except shade lines.
No. 2 is for Shade Lines. The rule for conventional shade lines:- Make the lower and right-hand lines of surfaces, shade lines, excepting lines dividing adjacent visible surfaces.
No. 3 is for all lines representing Invisible Lines of the object.
*No. 4 is for Dimension Lines, to be made with **RED** ink. Arrow-heads and Figures should always be made with **BLACK** ink.*
No. 5 is for Center Lines.

PROPORTIONS OF KEYS

When d = diameter of shaft in inches

b = breadth of key = $\frac{1}{4}d$

t = thickness of key = $\frac{2}{3}b$

EFFECTIVE DIAMETER

of a bolt with U. S. S. Thread = dia. of bolt — 1.30pi.

of a bolt with Sharp V Thread = dia. of bolt — 1.732pi.

THREADS PER INCH

Diameter	$\frac{1}{4}''$	$\frac{3}{8}''$	$\frac{1}{2}''$	$\frac{5}{8}''$	$\frac{3}{4}''$	$\frac{7}{8}''$	1″	$1\frac{1}{8}''$	$1\frac{1}{4}''$
No threads	20	16	12	11	10	9	8	7	7

DECIMAL EQUIVALENTS

8ths.		32nds.		64ths.	
1	.125	11	.34375	21	.328125
2	.250	13	.40625	23	.359375
3	.375	15	.46875	25	.390625
4	.500	17	.53125	27	.421875
5	.625	19	.59375	29	.453125
6	.750	21	.65625	31	.484375
7	.875	23	.71875	33	.515625
8	1.000	25	.78125	35	.546875
	16ths	27	.84375	37	.578125
1	.0625	29	.90625	39	.609375
3	.1875	31	.96875	41	.640625
5	.3125	32	1.00000	43	.671875
7	.4375		64ths	45	.703125
9	.5625	1	.015625	47	.734375
11	.6875	3	.046875	49	.765625
13	.8125	5	.078125	51	.796875
15	.9375	7	.109375	53	.828125
	32nds	9	.140625	55	.859375
1	.03125	11	.171875	57	.890625
3	.09375	13	.203125	59	.921875
5	.15625	15	.234375	61	.953125
7	.21875	17	.265625	63	.984375
9	.28125	19	.296875	64	1.000000

Ex. 1–

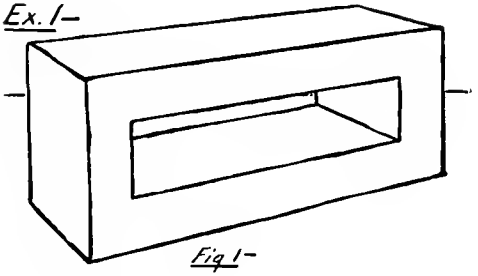

Fig 1–

Fig. 2–

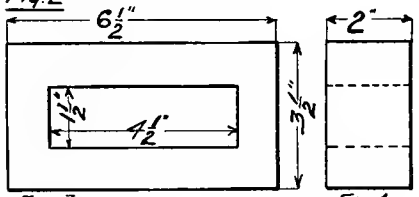

Fig. 3–

Fig 4–

Ex. 2–

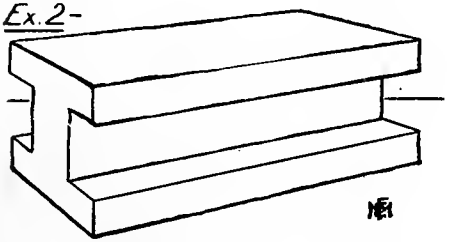

1. *Rectangular Prism.*

Make a working drawing showing three views of a prism $6\frac{1}{2}''$ long, $3\frac{1}{2}''$ wide, and $2''$ thick. Hole through the center of prism is $4\frac{1}{2}'' \times 1\frac{1}{2}''$. Fig. 1 is a perspective sketch or picture of the prism. Figures 2, 3, 4, show in order, the top, front, and side views, each in its proper position with the other two views. These three views, carefully dimensioned, complete the working drawing.

2. *Grooved Block.*

Make a complete working drawing of a block shown by sketch, which is $6\frac{1}{2}''$ long, $3\frac{5}{8}''$ wide, $2\frac{1}{4}''$ thick. Grooves are $1\frac{7}{8}'' \times \frac{5}{8}''$, and $\frac{7}{8}''$ from long edges of block.

Ex. 3 –

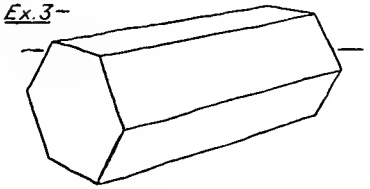

Ex. 4 –

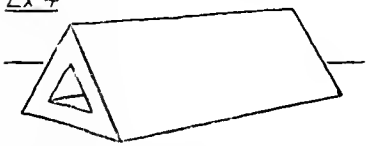

Ex. 5 –

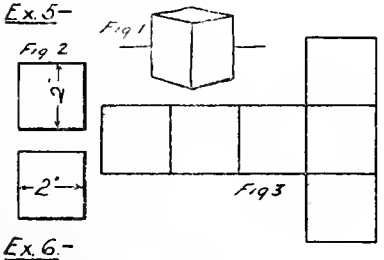

Ex. 6 –

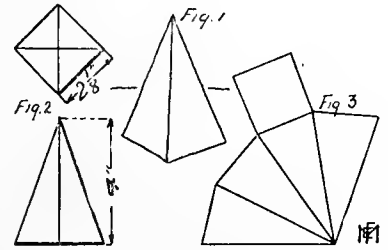

3. *Hexagonal Prism.*

Make a working drawing showing three views of a hexagonal prism $6\frac{1}{8}''$ long, and $2\frac{1}{4}''$ across parallel sides.

4. *Triangular Prism.*

Make a complete working drawing of a hollow prism which is $6\frac{3}{8}''$ long. The ends are equilateral triangles with sides 3" long, The sides of the prism are $\frac{1}{2}''$ thick.

5. *Cube,*

Make a working drawing of two views and develop the surface of a cube with faces $2'' \times 2''$

Fig. 1 is the sketch, Fig. 2 is the working drawing, and Fig 3 is the developed surface.

6. *Square Pyramid.*

Make a working drawing and develop the surface of the square pyramid shown by sketch.

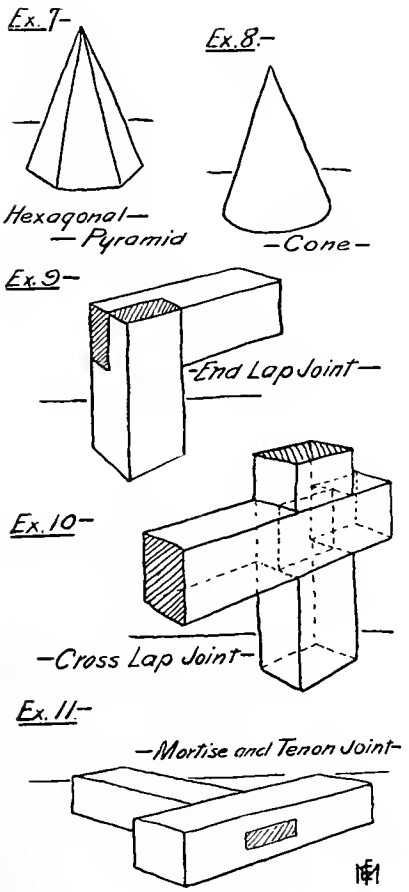

7. Hexagonal Pyramid.

Make a working drawing and develop the surface of a pyramid with hexagonal base, $2\frac{3}{8}''$ across parallel sides, altitude 5″.

8. Cone,

Make a working drawing and develop the surface of a cone with base $2\frac{7}{8}''$, altitude 5″

Make working drawings showing three views of each of the joints.

9. End Lap Joint.

Each piece is $4\frac{3}{4}''$ long, $1\frac{5}{8}''$ wide, $1\frac{1}{8}''$ thick.

10. Cross Lap Joint.

Each piece is $5\frac{1}{4}''$ long, $1\frac{5}{8}''$ wide, $1\frac{1}{8}''$ thick. Lap is $\frac{3}{4}''$ from end of each piece.

11. Mortise aad Tenon Joint.

One piece, $5\frac{3}{8}'' \times 1\frac{5}{8}'' \times 1\frac{1}{8}''$, with mortise $1\frac{5}{8}'' \times \frac{3}{8}''$. Tenon piece, $4\frac{3}{4}'' \times 1\frac{5}{8}'' \times 1\frac{1}{8}''$.

Ex. 12

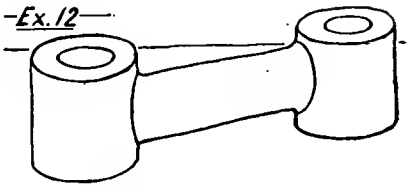

12. Link.

Make working drawing (front and top views) of a link 7″ between centers; each end is $2\frac{1}{2}$″ dia. $2\frac{7}{8}$″ high; hole, $1\frac{1}{4}$″ dia.; bar, $1\frac{3}{8}$″ dia.; fillet, $\frac{3}{8}$″ rad.

Ex. 13

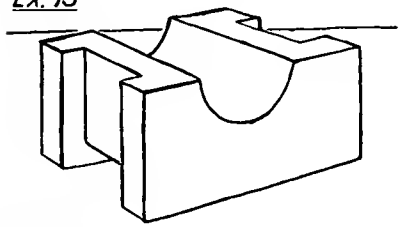

13. Bronze Bush for Bearings

Make three views, with dimensions, of a bush 5″ long, $2\frac{1}{4}$″ high, $3\frac{1}{8}$″ wide; groove, 2″ × $\frac{1}{2}$″; dia. of bearing, $2\frac{5}{8}$″.

Ex. 14

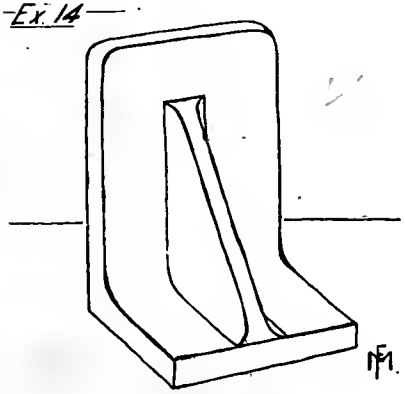

14. Angle Iron.

Make working drawing (front and side views) of angle iron with base $4\frac{1}{2}$″ × $4\frac{1}{2}$″ × $\frac{5}{8}$″, and upright $4\frac{1}{2}$″ × $6\frac{3}{4}$″ × $\frac{5}{8}$″. Brace is $\frac{5}{8}$″ thick, extends from top edge of base to within $1\frac{1}{8}$″ of top of upright. Fillets, $\frac{3}{8}$″ radius.

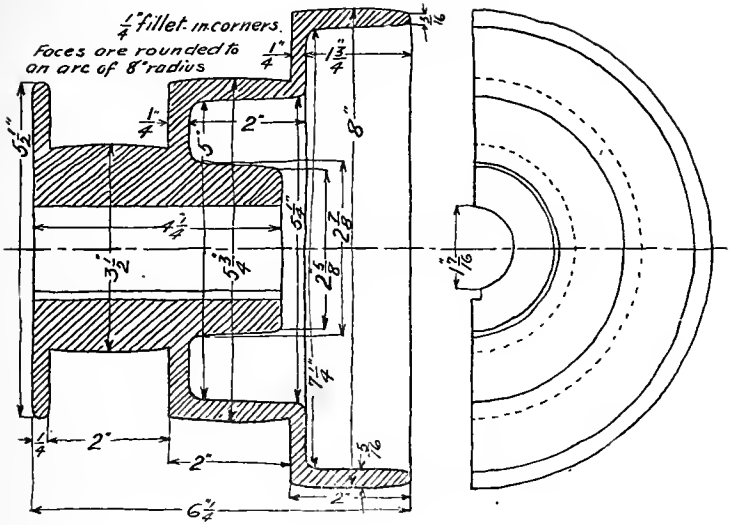

15. Cone Pulley

Sketch shows a half section of a three step cone pulley. Make drawing to scale full size.

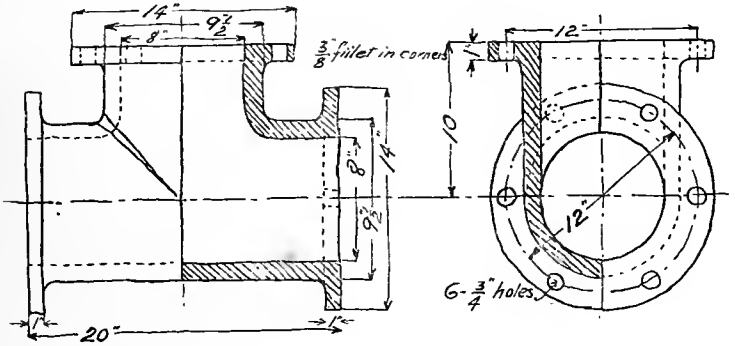

16. 8" Pipe "T"

In addition to the two views shown in sketch, make a top view. The drawing should be made to scale $\frac{1}{4}'' = 1''$.

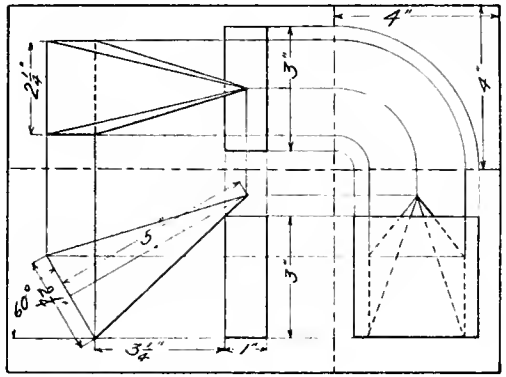

Ex. 17

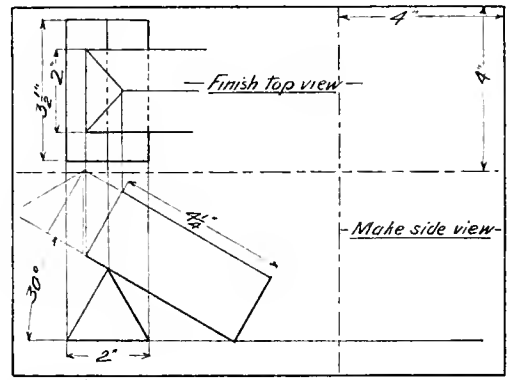

Ex. 18

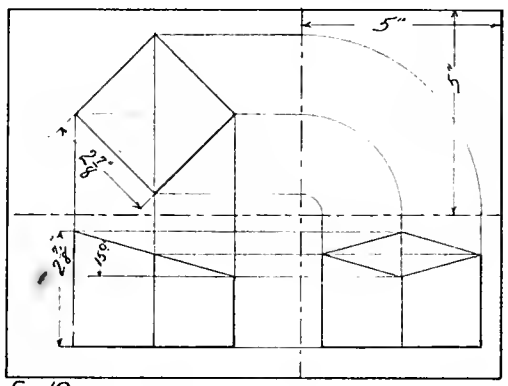

Ex. 19

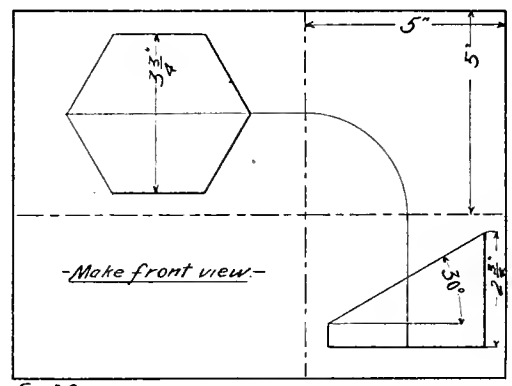

Ex. 20

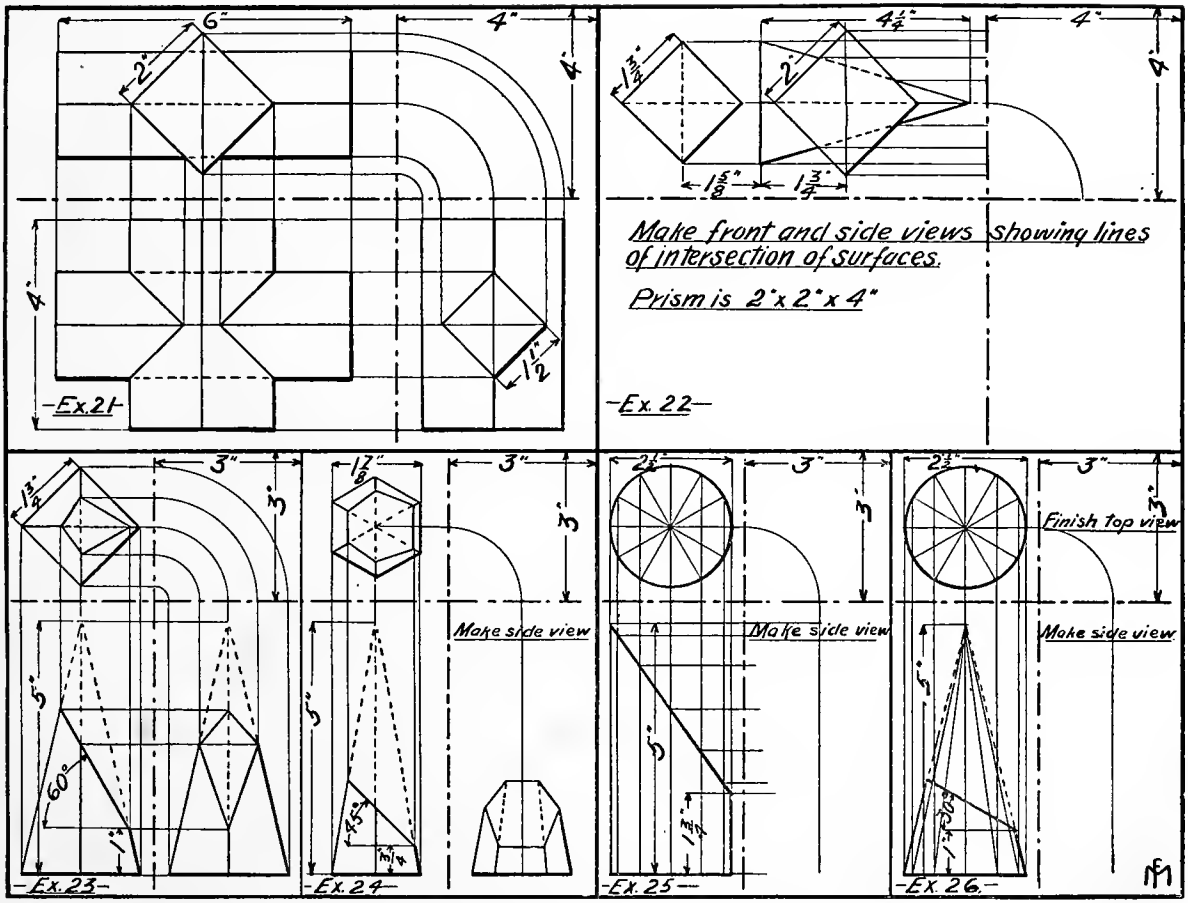
6"
4"
2"
4"
4"
1 1/2"
-Ex.21-
4 1/4"
4"
2"
4"
1 3/4"
1 5/8"
1 3/4"
Make front and side views showing lines of intersection of surfaces.
Prism is 2"x 2"x 4"
-Ex. 22-
3"
3"
1 3/4"
5"
60°
1"
-Ex. 23-
1 7/8"
3"
3"
Make side view
3"
45°
-Ex. 24-
2 1/4"
3"
3"
Make side view
5"
1 3/4"
-Ex. 25-
2 1/4"
3"
3"
Finish top view
Make side view
5"
30°
-Ex. 26-

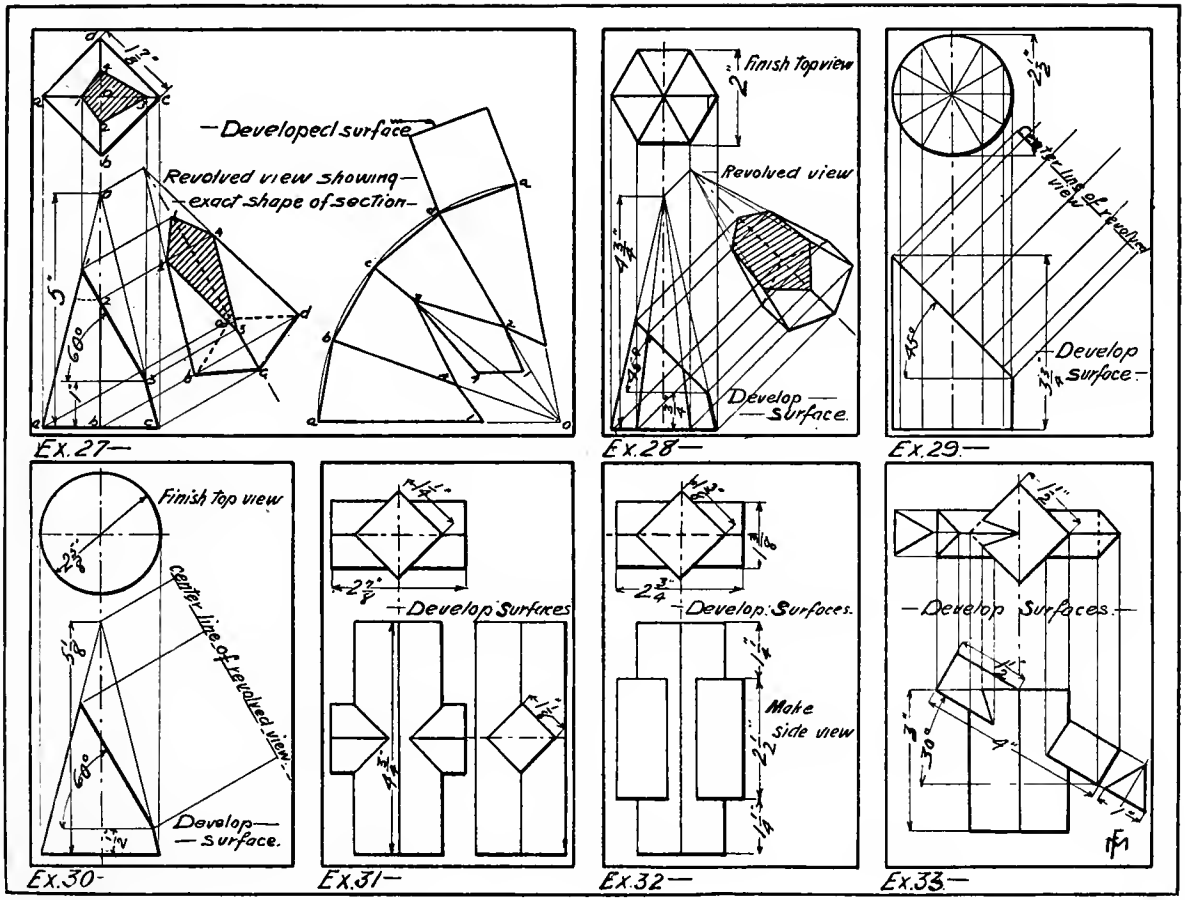
Developed surface
Revolved view showing
exact shape of section
Ex. 27
finish Top view
Revolved view
Develop
Surface.
Ex. 28
Center line of revolved view
Develop
Surface
Ex. 29
Finish Top view
Center line of revolved view
Develop
Surface.
Ex. 30
Develop Surfaces
Ex. 31
Develop Surfaces.
Make side view
Ex. 32
Develop Surfaces.
Ex. 33

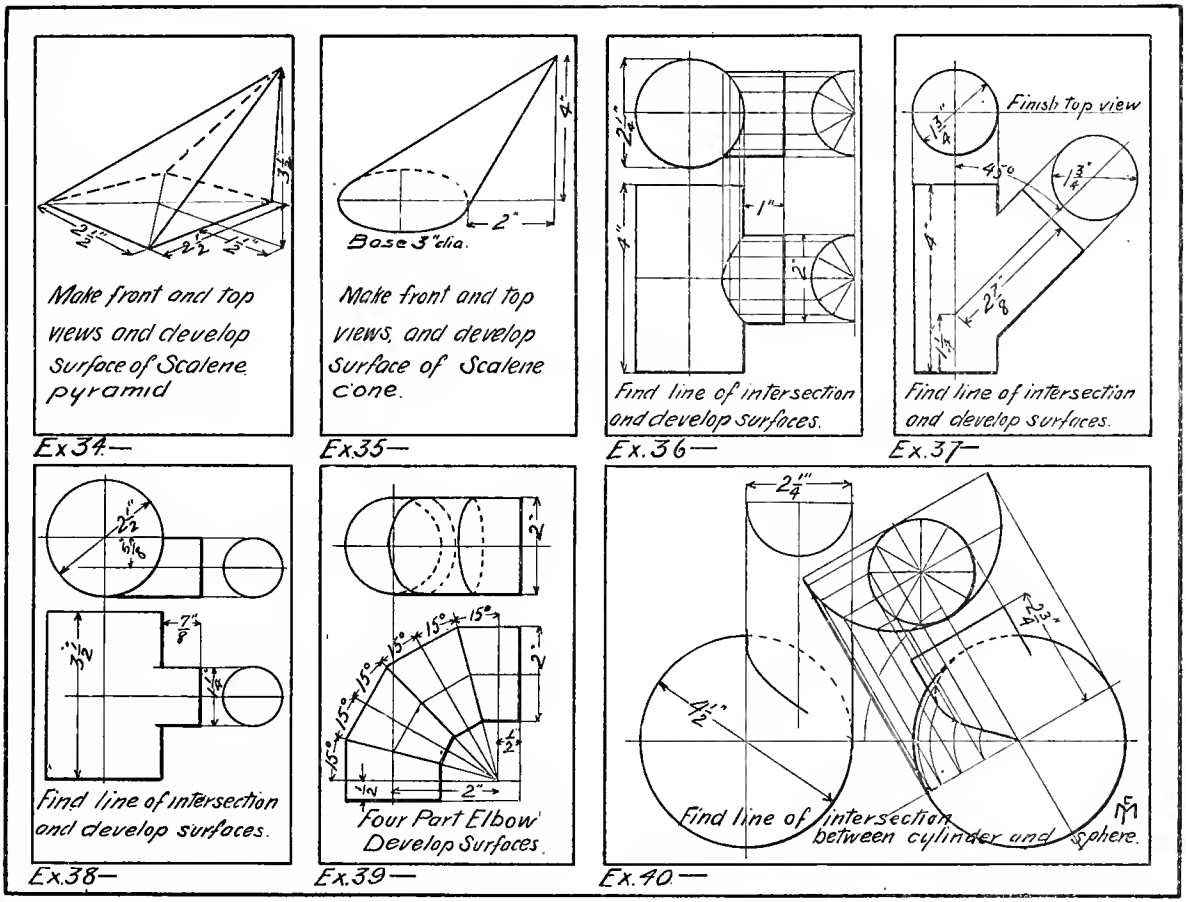
Make front and top views and develop surface of Scalene pyramid
Ex 34—
Base 3" dia.
Make front and top views, and develop surface of Scalene cone.
Ex.35—
Find line of intersection and develop surfaces.
Ex.36—
Finish top view
Find line of intersection and develop surfaces.
Ex.37—
Find line of intersection and develop surfaces.
Ex.38—
Four Part Elbow
Develop Surfaces.
Ex.39—
Find line of intersection between cylinder and sphere.
Ex.40—

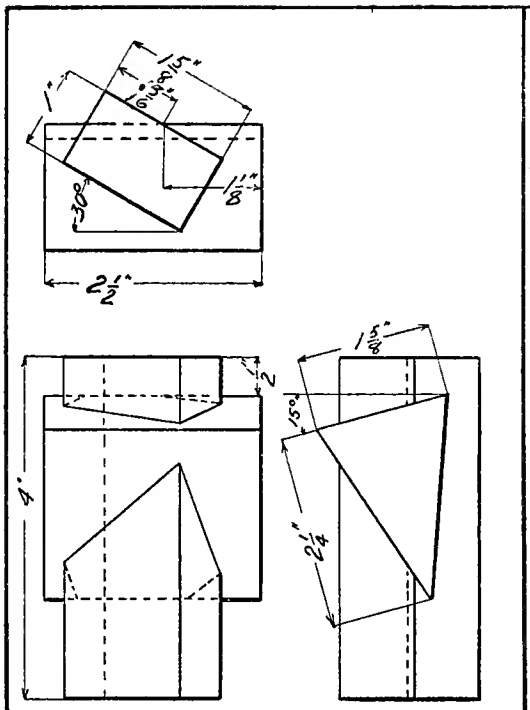

Ex 41.- Draw 3 views and develop surfaces.

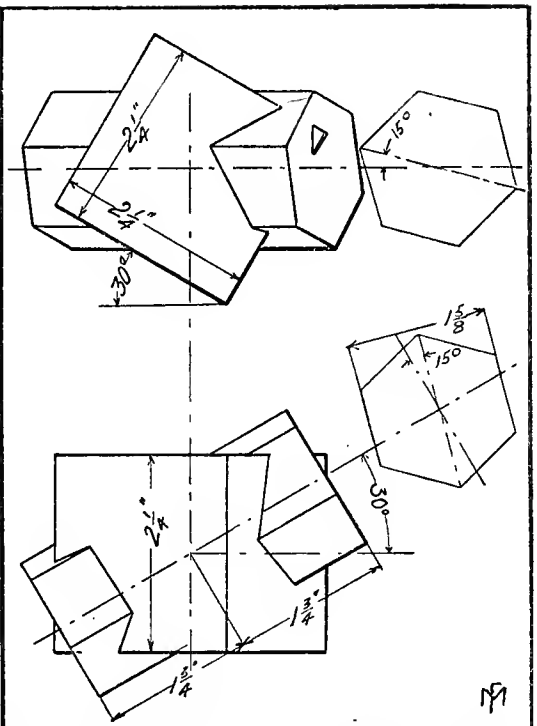

Ex.42.- Draw front, top and right side views and develop surfaces.

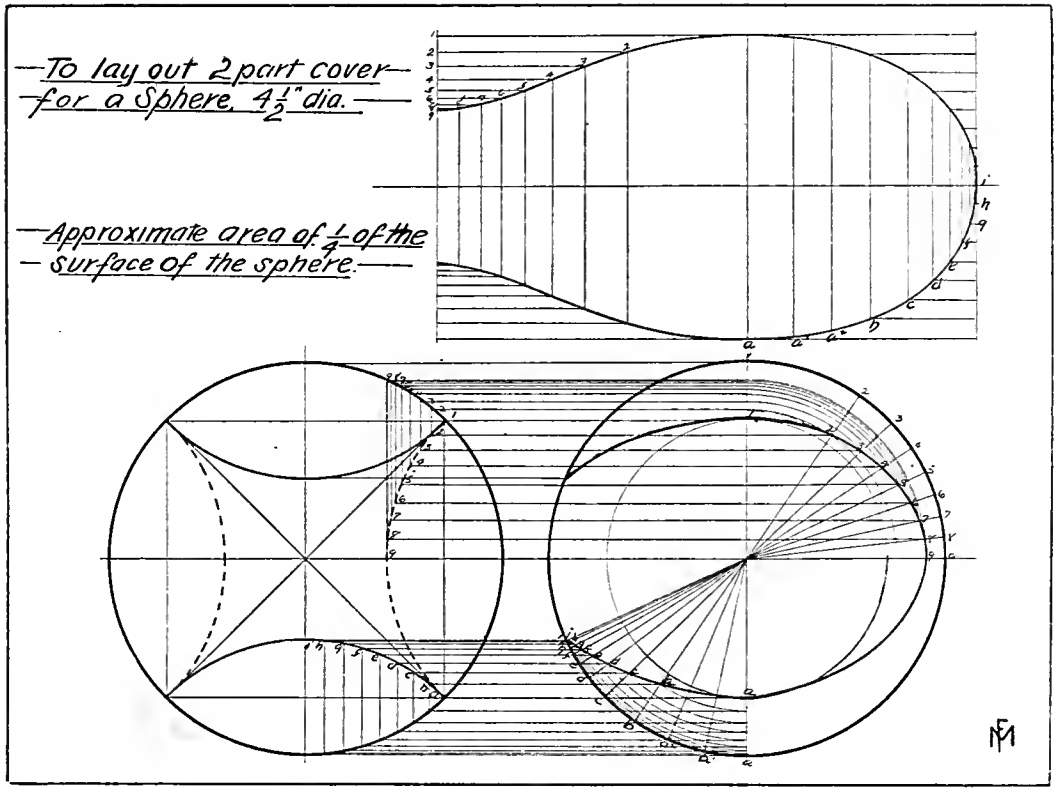
To lay out 2 part cover
for a Sphere, 4½" dia.
Approximate area of ¼ of the
surface of the sphere.

Angle Iron *Make drawing to scale full size*

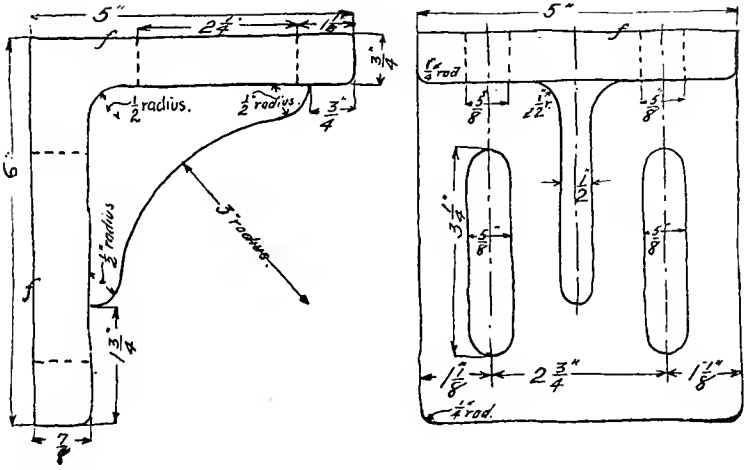

Ratchet Wheel

24 teeth $\frac{3}{8}$" deep. See Formulæ for Keys for size of keyway.

Make drawing to scale full size Section on line a-b

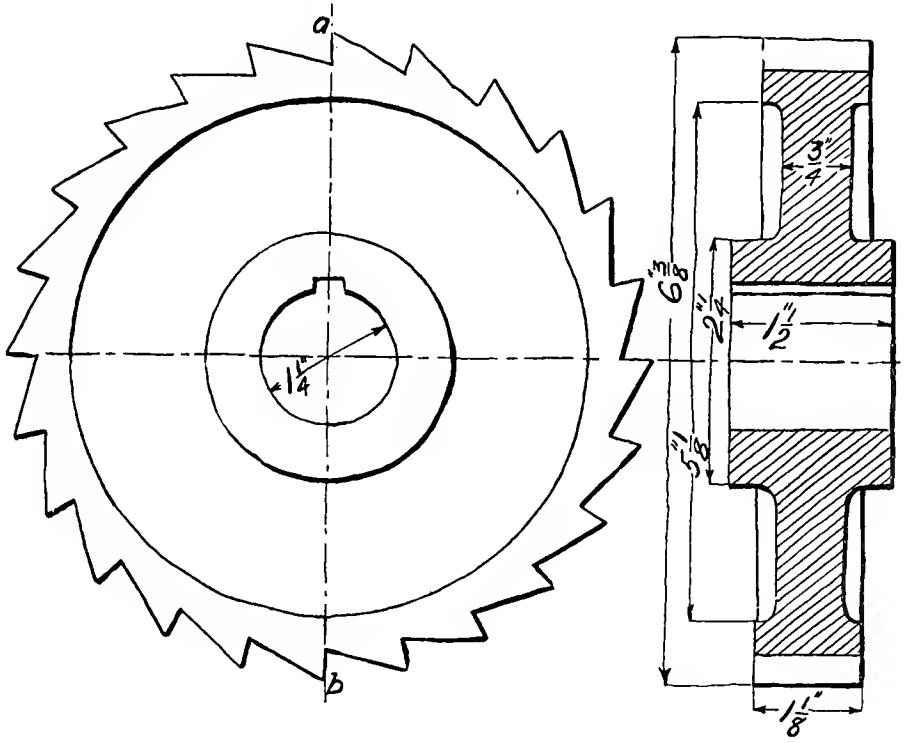

Governor Pulley *Make drawing to scale full size*

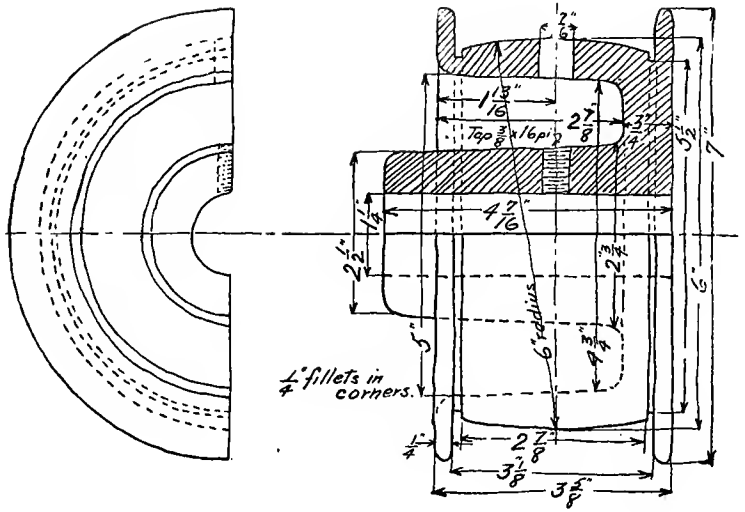

Piston Rod Gland and Bushing

Make drawing to scale full size *Section on line a-b*

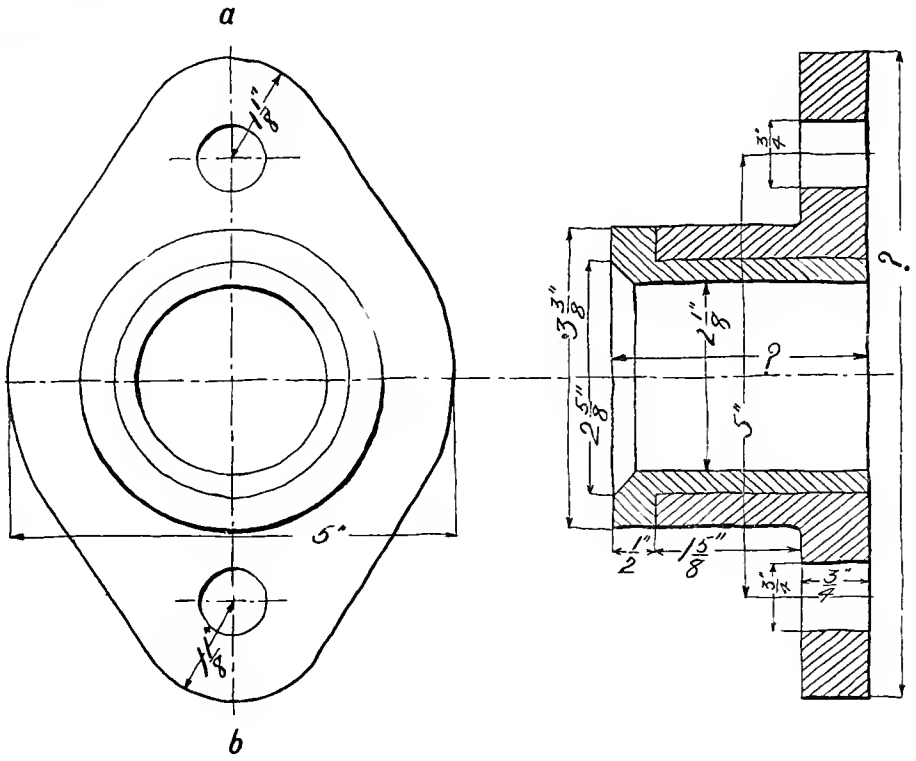

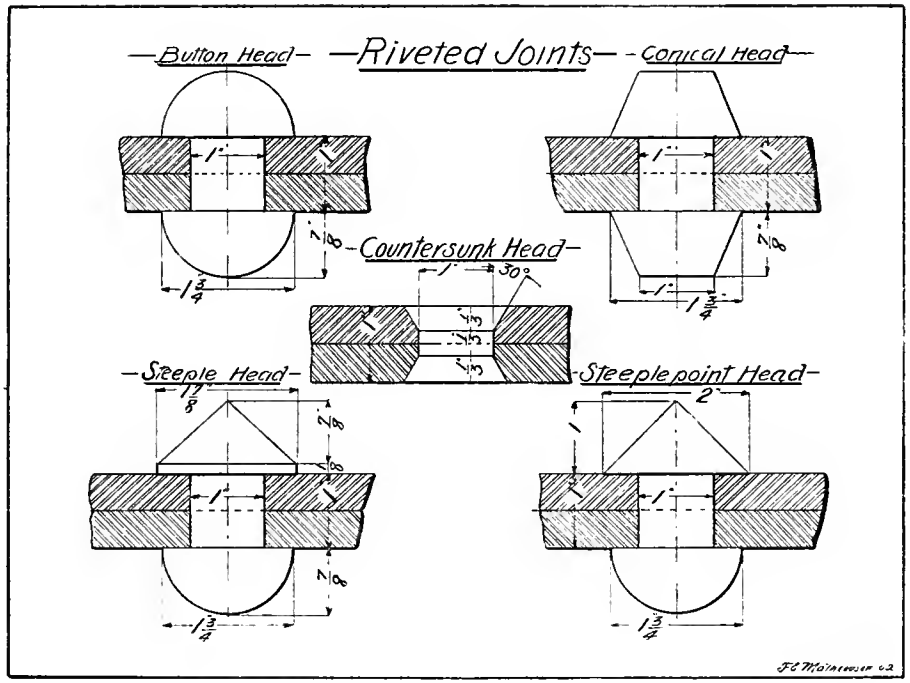
Riveted Joints
Button Head
Conical Head
Countersunk Head
Steeple Head
Steeplepoint Head
1"
30°
2"

MECHANICAL DRAWING.

MECHANICAL DRAWING is the art of making drawings capable of representing mechanical and architectural structures as a whole and in detail so clearly and completely that skilled workmen can make these structures exactly as they are intended to be, without any further directions than those contained in the drawings themselves.

Such drawings made expressly for the workmen are called "working drawings." Evidently these drawings, to meet all requirements, must express easily and perfectly all facts in regard to *position, form* and *magnitude* of objects represented. In other words, they must be capable of expressing the *geometry* of all mechanical figures—solid as well as plane—for geometry is defined as "that branch of mathematics which treats of *position, form* and *magnitude.*" They must represent these solid figures in space, yet the drawing must all be in one plane—that of the paper.

It is evident, then, that the art of Mechanical Drawing must have as its foundation an exact mathematical science. This is the science of "Projection." Drawings made in accordance with the methods of Projection Drawing meet all requirements completely.

PROJECTION DRAWING is the science and art of producing drawings which shall represent completely all facts of *position, form* and *magnitude* of all geometrical quantities in space. The methods employed in Projection Drawing are those of "Orthographic Projection" which is the basis of the science of Descriptive Geometry.

NOTES ON PROJECTION.

If from a point in space a straight line is drawn to a plane, the point in which the line meets the plane is a projection of the point in space. The line itself is a projecting line. The plane is a plane of projection.

ORTHOGRAPHIC PROJECTION. In orthographic projection (a) a plane of projection is either a vertical or a horizontal plane. (The planes of projection are assumed to be transparent.)

(b) Every projecting line is perpendicular to the corresponding plane of projection; hence, projection lines are either vertical or horizontal lines.

(c) The projection of a point on the vertical plane

of projection is called its vertical projection; its horizontal projection is on the horizontal plane of projection—hence, horizontal projecting lines are used to find vertical projections, and vertical projection lines to find horizontal projections.

(d) A projection of a line may be found from the corresponding projection of the limiting points. A projection of a surface may be found from the corresponding projections of its limiting lines. A projection of a solid may be found from the corresponding projection of its limiting surface.

(e) *In mechanical drawing, orthographic projection is used for the delineation of both the horizontal and the vertical projections of material objects upon two imaginary co-ordinate planes.*

ANGLES OF PROJECTION. The two co-ordinate planes of projection intersect at right angles and there form four right diedral angles. Denoting the horizontal plane by H and the vertical plane by V, a point, line, surface, or solid is said to lie in the *first angle* when it is above H and in front of V; *second angle* when it is above H and behind V; *third angle* when it is below H and behind V; *fourth angle* when it is below H and in front of V.

The *third angle* is the one commonly used by draftsmen for *working drawings,* as it affords a more convenient arrangement of views (projections) and is more in accord with modern practice. The fundamental principles of drawing are practically the same —no matter in which angle the object may be located, and a draftsman should be able to draw in all four. However, for the present we shall only use the *third angle* of projection.

VIEWS. The projections of an object on H and V are called, respectively, its *Horizontal Projection* and *Vertical Projection* or *Plan* and *Elevation,* or *Top View* and *Front View.* Of these three pairs of terms *Top View* and *Front View* are to be preferred. They are not only more definite, but they are more consistent with *Bottom View, End View, Side View,* or *Rear View*—terms commonly used in working drawings when the corresponding views of the object are shown.

The projection lines which determine any one view of an object are all parallel. These lines correspond to lines of sight, but lines of sight are never parallel—hence a projection is never a true picture. The term view must therefore be used only in the sense of a

projection. The line in which H and V intersect is called the *ground line.*

THE DRAWING. (a) To represent the planes of projection, a horizontal line is drawn to represent the ground line. That portion of the paper above or behind this line represents one plane of projection; that portion of the paper below or in front of this line represents the other plane of projection. H is behind and V is below the ground line when the third angle of projection is used.

(b) The relative positions of the different views or projections, with respect to the ground line and to each other, are the same as would result if one of the planes of projection were revolved about the ground line until H and V were both in the same plane.

(c) In orthographic projection any point in the third angle has its top view (horizontal projection) behind, and its front view (vertical projection) below the ground line.

(d) Orthographic projection thus requires of the imagination two distinct processes: (1) To *conceive each view on the corresponding plane of projection.*

(2) *To determine the position of the different views with respect to the ground line and to each other when the planes of projection have been brought into one plane.*

A POINT IN SPACE. (a) Every point has two views (one on H, the other on V) by which its position in space is determined.

(b) A point and its two views lie in the same plane perpendicular to both H and V—i. e., a plane passed through the two projecting lines.

(c) The *Top View* of a point is as far behind the ground line as the point itself is behind V. The *Front View* of a point is as far below the ground line as the point itself is below H.

(d) When a point lies in either H or V one of its views coincides with the point itself; the other view will lie in the ground line.

(e) A point in space can be represented by its two views, neither of which is the point itself.

(f) The two views of a point always lie in the same straight line at right angles to the ground line.

A LINE IN SPACE. *Straight lines perpendicular to H and V.*

(a) A line perpendicular to either plane of projection has for its view on that plane simply a point.

(b) A line perpendicular to either plane of projection has for its view on the other plane a straight line perpendicular to the ground line, and equal in length to the line of which it is the projection.

Straight lines parallel to one plane of projection, but at an angle with the other.

(a) When a line is parallel to either plane of projection its view on that plane represents the true length of the line; and the angle which this view makes with the ground line is equal to the angle which the line in space makes with the plane to which it is not parallel.

(b) A line parallel to either plane of projection has for its view on the other plane a line parallel to the ground line.

(c) When a line is not parallel to a plane of projection its view on that plane is always shorter than the true length of the line.

Lines parallel to both H and V, and lines parallel to neither H nor V.

(a) A line parallel to both H and V has for its two views lines parallel to the ground line, both of which are equal in length to the line itself.

(b) If a line is parallel to neither plane of projection, both views are shorter than the line itself. The angles which the line makes with the planes of projection are not represented in their true size by the angles which the views make with the ground line.

PROBLEMS IN PROJECTION.

1. Represent
   (a) A line $1\frac{1}{2}''$ long, perpendicular to H, $\frac{1}{2}''$ from V, top end $\frac{1}{2}''$ below H.
   (b) A line $1\frac{1}{4}''$ long, perpendicular to V, $\frac{1}{2}''$ from H, nearest end $\frac{1}{2}''$ from V.
   (c) A line $1\frac{3}{8}''$ long, parallel to V, slanting downward to the right, at 60° with H, $\frac{1}{2}''$ from V, top end $\frac{1}{2}''$ below H.
   (d) A line $1\frac{3}{8}'$ long, parallel to H, slanting back 60° with V, toward the right, $\frac{1}{2}''$ from H, and nearest end $\frac{1}{2}''$ from V.

2. Make the apparent projection in V of a line 2″ long, slanting downward to the left at 45° with H, and backwards 45° with V. Its top end is $\frac{1}{2}''$ from both H and V.

3. A line appears $1\frac{7}{8}''$ long at an angle of 45° with both H and V. Its top end is $\frac{1}{4}''$ below H and $1\frac{3}{8}'$ from V. The line slants downward, forward, and to the right. Find its true length, and the angle it makes with H.

4. A line slanting downward, forward, and to the right, appears to be 2″ long at 60° with H. Its top view makes an angle of 45° with V. The top end is $\frac{1}{4}''$ below H and $1\frac{1}{2}''$ behind V. Find the true length of the line and the actual angles the line makes with both H and V.

5. A line appears slanting downward, backward, and to the left. The H projection is at 30° with V and $2\frac{1}{4}''$ long. The V projection appears at 30° with H, and the top end of the line is $\frac{1}{2}''$ from both H and V. Find the true length of the line and the angle it makes with V.

6. The profile projection of a line shows it placed at 30° with V and 60° with H. The top end of the line is $\frac{3}{8}$ below H and 1″ behind V. The line is $1\frac{1}{2}''$ long and slants toward V. Make the horizontal and vertical projections of the line. The line is 1″ behind the profile plane.

7. Draw top and front views
   (a) Of a card $1\frac{1}{4}''$ square perpendicular to H, parallel to and $\frac{1}{2}''$ behind V. Its top edge is $\frac{3}{4}''$ below H.
   (b) Of the same card turned back to the right at 45° with V.
   (c) Of the same card when, besides being turned back at 45° to V, the edges

which were parallel to H make an angle of 45° to H. The card is tipped over toward the right.

8. Draw top and front views
   (a) Of an equilateral triangular card, sides $1\frac{1}{4}$″ long, when it is parallel with H and its front edge parallel with V. The front edge is $\frac{1}{2}$″ behind V and 1″ below H.
   (b) Of the same card when its front edge slants down to the right at 30° with H.
   (c) Of the same card when its front edge, besides slanting downward to the right at 30° with H, is turned back toward the right at 45° with V.
9. Draw the front and top views
   (a) Of a cube with faces 1″ square, its top face parallel to and $\frac{3}{4}$″ below H, its front face parallel to and $\frac{1}{2}$″ behind V.
   (b) Of the same cube when its front face is parallel with V and its top face is at 30° with H, the cube tipped over toward the right.
   (c) Of the same cube when, besides having its top face at 30° with H, has its front face turned back toward the left at 30° with V.
10. Draw the top and front views
   (a) Of an equilateral triangular prism, with the sides of the base of the prism $1\frac{1}{4}$″ long, the prism being $\frac{3}{4}$″ thick. The triangular faces are parallel to V, the front face $\frac{1}{2}$″ behind V, and the lower rectangular face is parallel to, and $1\frac{3}{4}$″ from H.
   (b) Of the same prism when it is tipped over toward the right so that its lower rectangular face is at 45° with H, the front face parallel to V.
   (c) Of the same prism when its lower rectangular face is at 45° with H, and its front face is turned backward toward the right at 45° with V.
11. (a) The front face of a rectangular block is $4\frac{1}{4}$″ long, $1\frac{3}{4}$″ wide, and is placed parallel to and 1″ from V. The top

face is at 30° with H, and tipped up to the right. The top view shows that the block is $1\frac{1}{4}''$ thick.

(b) Make the top and front views of the same block when its lower face is at 30° with H and its front face is turned at 15° toward the right from V.

12. (a) Make the top and front views of a square prism $3\frac{1}{4}''$x$3\frac{1}{4}''$x$1\frac{1}{4}''$, with the square faces parallel to H, and its front rectangular face at 15° with V, turned to the left. There is a hole 2′ square through the block. The nearest corner is $\frac{1}{4}''$ behind V and the top face $2\frac{1}{2}''$ below H.

(b) The same block when besides being turned to the left at 15° with V, is tipped up at the right so that the square faces make an angle of 30° with H.

13. (a) A pyramid $3\frac{1}{2}''$ high and base 2″ square is placed with the base 4″ below and parallel to H, and the sides of the base at 45° with V. The nearest corner is 1″ behind V. Make top and front views.

(b) Same pyramid with the base at 30° with V and tipped over toward the right at 30° with H.

(c) Same pyramid when besides having its base at 30° with H, its axis turned away toward the right at 45° with V.

14. (a) Make the top and front views of an equilateral triangular pyramid whose sides at the base are $2\frac{1}{2}''$ long, the pyramid being $3\frac{1}{2}''$ high. The base is 4″ below and parallel to H. The left side of base makes an angle of 75° with V.

(b) Same pyramid with the left side of base at 75° with H, and the base at 30° with H, pyramid tipped over toward the right.

(c) Same pyramid with base at 30° with H and the left side brought forward, making an angle of 30° with V.

15. Make the apparent V projection of an L-shaped block, when the lower face of the block is at 30° with H, and the front face is at 30° with V.

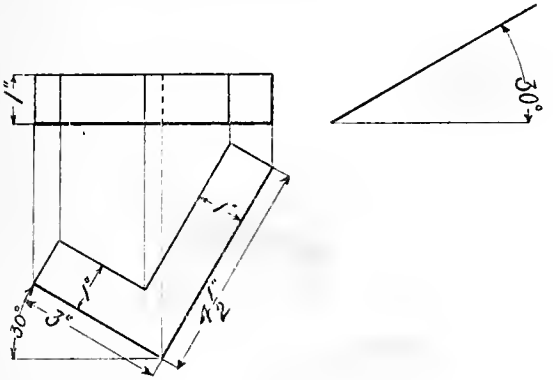

16. Make the apparent V projection of an H-shaped block, when the lower faces of the block are at 15° with H and the front face is at 15° with V.

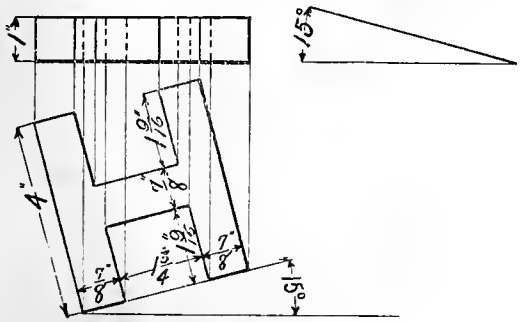

17. Make the apparent V projection of two intersecting square prisms, when the lowest face is at 30° with H and the front edges are at 15° with V.

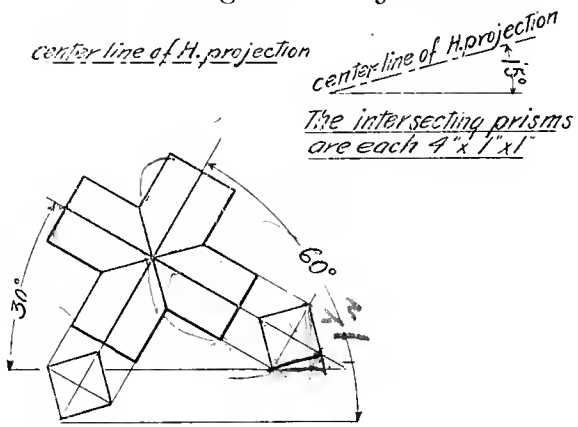

18. Make the apparent V projection of a cylinder, when its axis is at 45° with H and 15° with V.

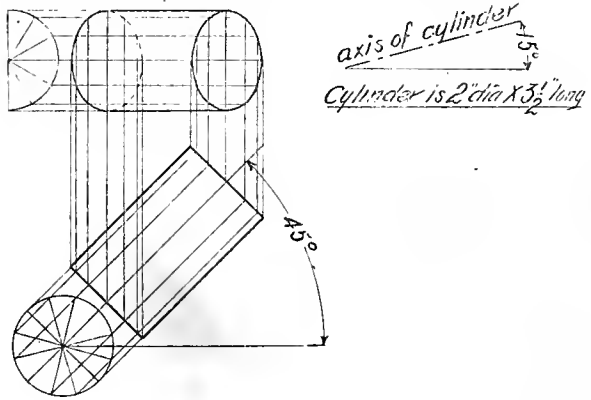

WORKING DRAWINGS.

WORKING DRAWINGS are drawings showing machine or architectural construction as a whole or in detail so clearly and completely that a workman can make the desired construction exactly as it is intended to be without any other directions than those contained in the drawings themselves. The student or draftsman, then, should keep in mind the following general rules when making working drawings:

A working drawing may be divided into three parts: (1) The outline drawing showing the shape of the object; (2) the dimensions giving the size of every part; (3) the lettering—*i. e.*, printed explanations and directions. In working drawings the object is represented by two or more views, each of which is drawn according to the principles of projection. Hence, these views are really projections—not figures; and as many views must be shown as may be necessary to completely represent the object. In the arrangement of views the top view is drawn above the front view, the bottom view below the front view, and the end view nearest the end it represents, etc. When a section view is drawn, the point at which the section is taken is indicated on one or the other views. The usual way is to draw a trace of the cutting plane, lettering it and marking the section view to correspond—as, for example, section at A—B.

THE DRAWING shows the shape of the object. It may be made to any convenient scale—as full size, half size, quarter size, etc. Shop units are feet and inches and parts of an inch. The fractional scale of 8ths, 16ths, and 32ds is generally used, although sometimes the decimal scale is preferred where drawings of machinery are made. Drawings are first made in pencil. If a number of copies are required, instead of inking the drawing on the original sheet a tracing is made and blue prints taken. A drawing which represents the object complete with each part in its proper place is called an ASSEMBLED DRAWING. A DETAILED DRAWING should have each part by itself.

When drawings are to be made on small sheets draw one detail on each sheet, using largest scale possible. Draw all small details full size. When drawings are to be made on large sheets, distribute details on sheets so as to have all details of one part of the object on the same sheet and in a group apart from similar groups of other details. If possible, draw the front view of

each detail in the same position, vertically or horizontally, that it appears in the assembled object. If desirable, details may be distributed so that the castings and forgings will be upon separate sheets. If possible, make all drawings on one sheet to the same scale.

After the size of the sheet has been decided upon, make a rough sketch composed of rectangles showing the approximate location of views and distances between them, allowing a space of at least $1\frac{1}{2}'' \times 3''$ in the lower right hand corner for the main title. Start drawing by laying out all center lines of views, and mark off their location on sheet before drawing outlines of views; place dimensions on views before section lining. Section lines should not be drawn parallel to any line of the drawing, if possible. Where a part of the detail is to be finished a small "f" is printed on the line representing the surface to be finished, with the cross bar of the "f" on the line. Where a special finish is desired, a note stating the character of the finish is printed adjacent to the surface to be finished. Where a detail is to be finished all over, it is stated thus,—"f all over." Special notes which would be of value to the workman and save extra drawing should be freely used.

Each detail should have a sub-title stating its name, number of pieces wanted, and kind of material of which it is to be made. Pattern numbers should be indicated on drawings and castings. Each detail should be numbered, as well as the drawing, and these numbers should appear on the assembly drawing. The main title should state briefly the name of detail or details, the name of the object of which the detail is a part, the scale or scales, the date, and draftsman's name or initials.

The drawings of an object should contain sufficient views in section to completely show its construction; and each detail should be fully dimensioned to show its size and relation to other parts of the object.

The *front view* or *elevation* is usually that view of the object which, if taken alone, would convey the best idea of its proportions and construction. The *top view* or *plan* is the view looking down on the object; and *end views* or *side views* may be used with or in place of the top view. *Bottom* and *oblique views* are used only where the usual views do not clearly show the entire construction.

SECTIONS. Sectional views are made to show the shape of certain parts of the object which can not be well designated in the different views. Section lines should usually be made at an angle of 45° to the T square, and about 1-16 of an inch apart. Sections of the same part should have the section lines running in the same direction. Section lines should run in opposite directions when the section is shown through two separate or adjacent parts.

DIMENSIONS. The size of every part of an object is given by the dimension lines and figures. DIMENSION LINES show exactly from what point to what point the measurement is to be made. Such lines should be distinguished from the regular lines of the drawing. They are sometimes fine, broken lines, very fine black lines, or red lines. Red lines on a tracing print more faintly on blue process paper than do the black lines, and this has the effect of making the drawing stand out with the dimension lines in the background.

DIMENSION FIGURES and the ARROWHEADS at the ends of the dimension line, however, *should always be black*. FIGURES should be plain, heavy, and unmistakable. The dimensions on a drawing are those of the object represented, no matter what the scale may be. It is better to leave a space in the middle of each dimension line for the dimension than to write figures above or below the line. If the dimension line is so short that a dimension can not be given on it, the latter is placed to one side, and an arrow indicates where it belongs. Any dimension less than one foot is given in inches—not in decimal parts of a foot. Anything less than an inch is given by the nearest vulgar fraction whose denominator is 64, 32, 16, 8, 4, or 2. Any other fraction should be given in decimal form. As a rule the line between the numerator and denominator of a fraction should not be oblique. FEET and INCHES are indicated thus—6′ 3″. If a dimension is in even feet, or in feet and a fraction of an inch, 0″ should be noted, like this—2′ 0′, or 11′ 0 $\frac{1}{8}$″. Long dimensions are put on first, and those are subdivided and re-subdivided as may be necessary. Care is necessary to make the subdivision foot up the longer length. "Over-all dimensions" are of considerable importance to save the workman the trouble of footing up or adding together a number of smaller lengths. Dimension lines should not cross each other when it can be avoided.

and should stop at exactly the right place. A drawing is usually made to scale; but if scale and dimensions as given do not agree, the dimensions are always assumed to be correct and govern the men in the shop. In some shops workmen are not allowed to scale drawings, but must use only the written dimensions. The workmen should have all the questions which he may need to ask answered on the drawing itself; therefore the notes are an important part of the working drawing.

DIMENSIONS must be just sufficient in number to remove any doubt as to the size of any part and its relation to other parts or to the whole construction, and they should not be repeated in other views. Dimensions should be placed upon the drawing so as not to interfere with the clearness of the drawing or to be confused with other dimensions. The particular space dimensioned should be so chosen as to avoid the necessity of additions or subtractions by the workman in executing the work.

DIMENSION LINES. For linear measurements the lines must be perpendicular to the parallel lines or surfaces between which the dimension is taken. For angular measurements the lines must be arcs described from the vertex of the angle. For diameters of circles the line must be a diameter other than that which would coincide with the vertical or horizontal center line of the circle. The line may also be a line drawn parallel to a diameter of a circle and perpendicular to a tangent drawn at the extremities of the diameter used. For dimensioning radii of arcs the line is to be drawn from the center of the arc. For measurements of $\frac{1}{4}''$ or less the line is to be drawn in two parts, each part being outside of the space dimension. For adjacent measurement lines in the same direction the lines are to be as one continuous line. For a series of dimensions in the same direction of which some are the sum total of the others, lines are to be drawn in the order of their magnitude, the longest being drawn farthest outside. Dimension lines should not be closer than $\frac{1}{4}''$ to line of object or to other dimension lines, drawn parallel to them. Termination lines should not touch any line of the object, if possible, and must be perpendicular to the dimension line. They must be perpendicular to the line of the object being dimensioned, and should extend to the dimension line.

SUGGESTIONS. If one view shows a larger portion of the object in its true shape and size than any other view, start that view first. Estimate the space each view will occupy, and draw center lines, allowing space enough between the views for dimensions. Build up each view about its center lines. Project views from one view to another to save work with the scale. It is often impossible to complete one view at a time, and in many cases it is necessary to carry along two or more views simultaneously, drawing the main outlines first—details last. Be sure important measurements to center lines, etc., are correct before putting in dimensions or smaller details depending upon them. If a dimension is altered, change all dimensions relating to or depending upon it to correspond.

ORDER OF INKING. Arcs of circles, irregular curves, straight lines, center lines, dimension lines, dimensions, section lines, notes, title, and border lines.

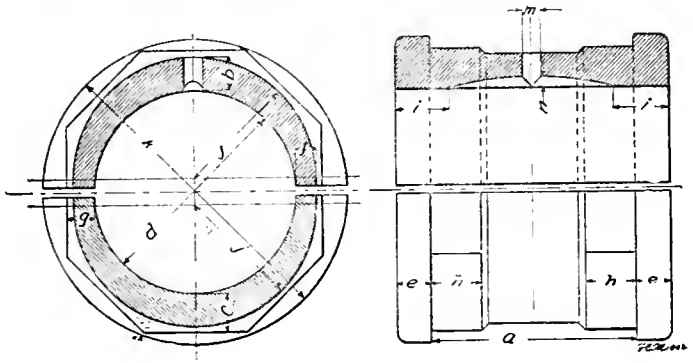

BRONZE SEAT for BEARINGS

The drawing shows a bronze seat designed for pillow-block or pedestal bearings.

The following proportions may be used, based on the diameter of the shaft — "d"

$a =$	$1\frac{1}{2}d$	$b =$	$.1d + \frac{1}{4}''$	$c =$	$\frac{1}{8}d + \frac{1}{4}''$	$e =$	$\frac{1}{8}d + \frac{1}{8}''$
$f =$	$.1d$	$g =$	$\frac{1}{8}d$	$h =$	$\frac{1}{4}d$	$i =$	$\frac{1}{3}d$
$j =$	$\frac{1}{2}d + f$	$k =$	$1\frac{5}{8}d$	$m =$	$\frac{1}{4}''$	$n =$	$\frac{1}{8}''$

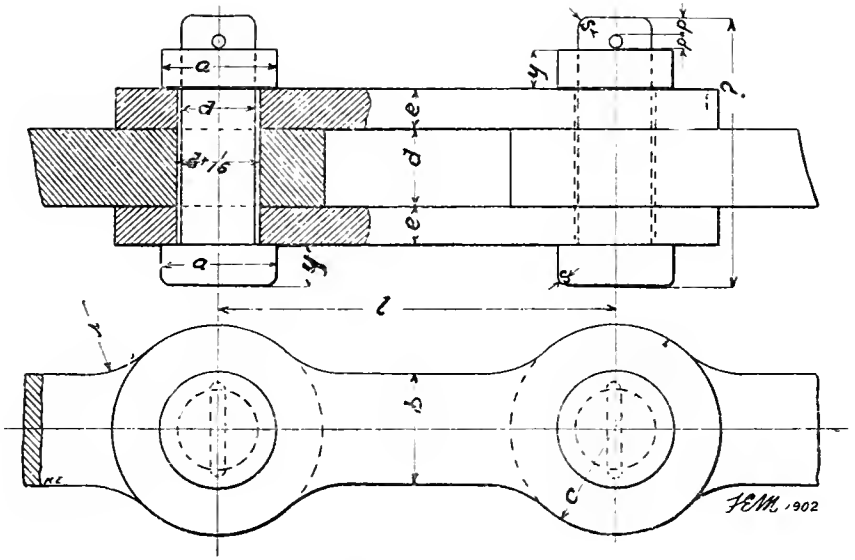

FLAT-LINK CHAIN

Flat-link chains are used for driving machinery where heavy resistances are to be overcome, as in cranes and dredging machines. When the chain merely supports a load, the following proportions may be used, based on the diameter of the pin — "d"

$a =$	$1\frac{3}{4}d$	$b =$	$1\frac{1}{3}d$	$c =$	$2\frac{2}{3}d$	$e =$	$\frac{1}{2}d$	$r =$	b
$y =$	e	$p = \frac{1}{3}d + .05''$		$l =$	4 to 8d	$s =$	$\frac{1}{8}d$		

SCREW THREAD FORMULÆ

The **SCREW** *is a cylinder, upon which has been formed a helical projection or thread. The screw fits into a hollow corresponding form called the* **NUT**.

The **PITCH** *of a screw, is the distance from the center of one thread, to the center of the next thread, measured parallel with the axis of screw.*

The **LEAD** *of a screw, is the distance its nut would travel along the axis in one turn of the screw. The Nominal Diameter is that of the cylinder upon which the thread is cut. The Effective Diameter is the diameter at the bottom of the threads.*

For the U. S. Standard Thread, when d = *nominal diameter of bolt,*

p =	*pitch of thread,*	=	$0.24\sqrt{(d + 0.625)} - 0.175$
n =	*number of threads per inch,*	=	$1 \div p$
x =	*depth of thread,*	=	$0.75 \times p(\sin.60°) = 0.65p$
x_1 =	*total depth of V,*	=	$p(\sin.60°) = 0.866p$
e =	*effective diameter of bolt,*	=	$d - 2x$
t =	*thickness of nut,*	=	*diameter of bolt.*
h =	*thickness of bolt head,*	=	$0.75 \times d + 0.0625$
f =	*distance between parallel sides of head and nut,*	=	$1.5 \times d + 0.125$
f_1 =	*distance across corners of hexagonal nut,*	=	$1.155 \times f$
f_2 =	*distance across corners of square nut*	=	$\sqrt{2f^2}$

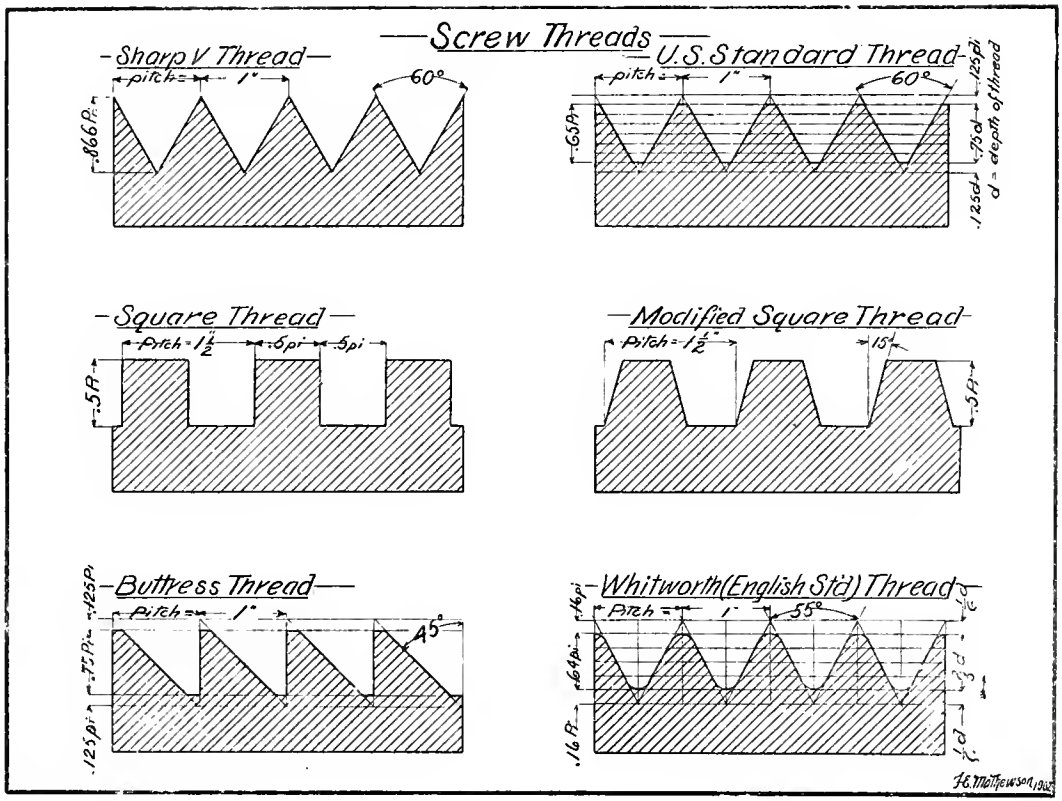
Screw Threads
Sharp V Thread
pitch = 1"
60°
.866 Pi
U.S. Standard Thread
pitch = 1"
60°
.65 Pi
.125 pi
.75 d
.125 d
d = depth of thread
Square Thread
Pitch = 1½"
.5 pi
.5 pi
.5 Pi
Modified Square Thread
Pitch = 1½"
15°
.5 Pi
Buttress Thread
Pitch = 1"
45°
.125 Pi
.75 Pi
.125 pi
Whitworth (English Std) Thread
Pitch = 1"
55°
.16 pi
.64 pi
.16 Pi
F.E. Matthewson 1902

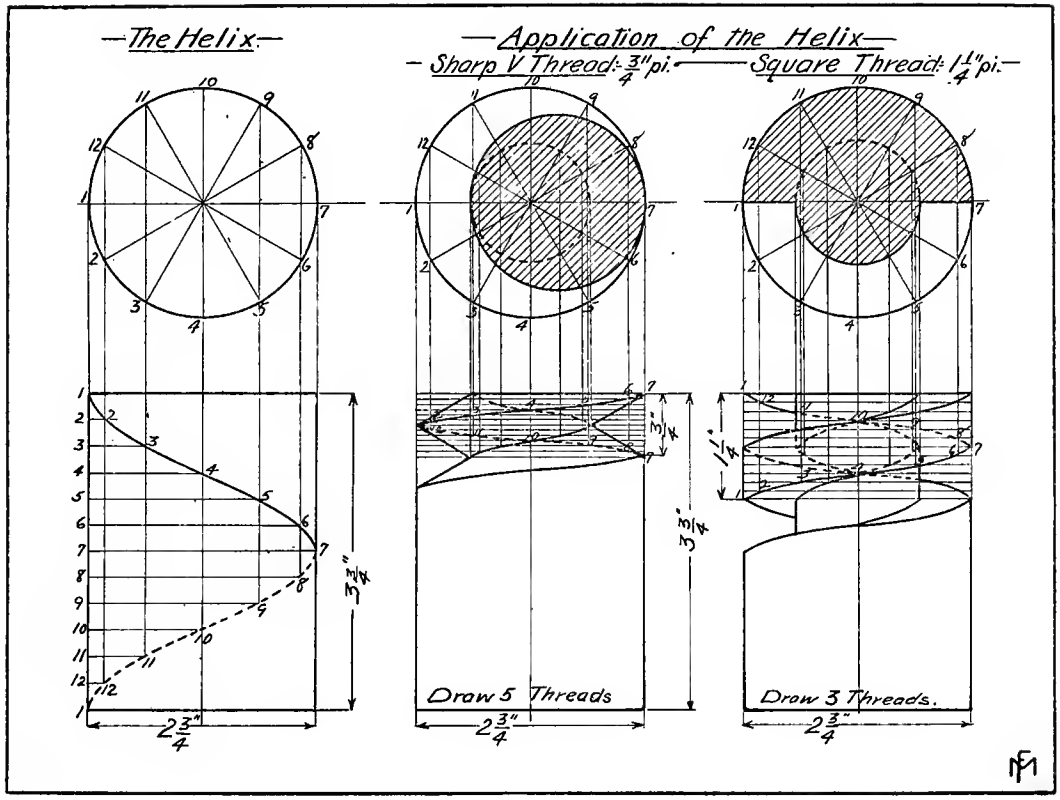
—The Helix—
—Application of the Helix—
— Sharp V Thread: 3/4" pi. —— Square Thread: 1/4" pi. —
3 3/4"
2 3/4"
Draw 5 Threads
Draw 3 Threads.
1 1/4"

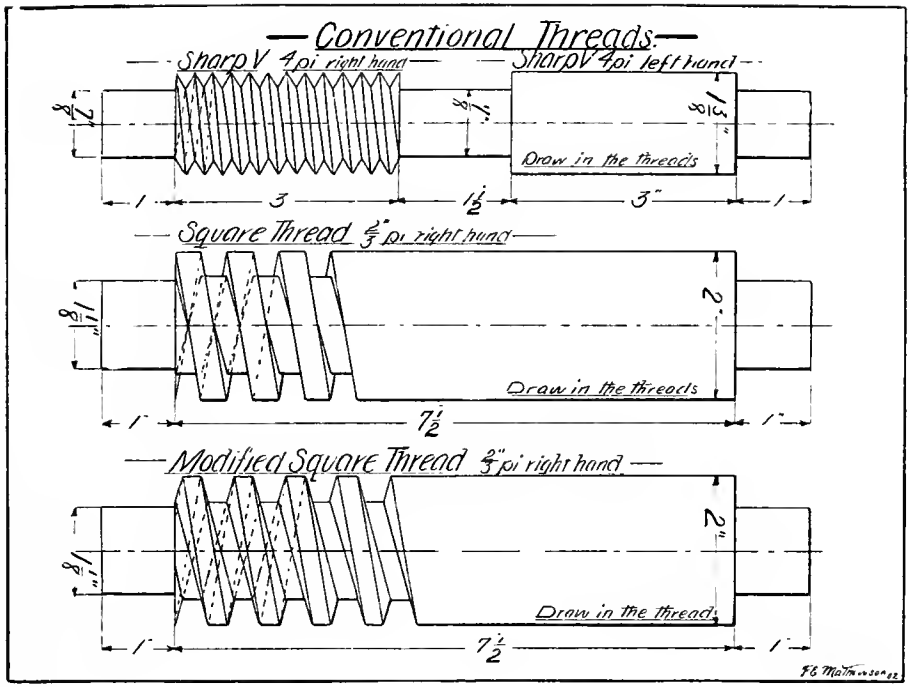
Conventional Threads
Sharp V 4 pi right hand
Sharp V 4 pi left hand
Draw in the threads
Square Thread 2/3 pi right hand
Draw in the threads
Modified Square Thread 2/3 pi right hand
Draw in the threads

To draw a BOLT with HEXAGONAL HEAD and NUT

First make calculations (using the Screw Thread Formulæ) for parts f, t, h, and p, when d = dia. of bolt. The conventional method used to represent the chamfer on the head and nut is shown in the drawing.

In Fig. 2, with center at 2, and rad. 2-1, draw arc 1-3; with centers at 1 and 3, draw arcs 2-8 and 2-7; with 7 and 8 as centers, draw lines tangent to line 1-3.

In Fig. 4, with center on the center line of bolt and rad. = 3-4, (w) draw an arc tangent to line 3-4; bisect lines 2-3 and 4-5 in Fig. 3 at 9 and 10, and draw lines from these points obtaining 9 and 10 in Fig. 4. With 9 and 10 as centers, draw arcs tangent to line 2-5, and complete the chamfer by drawing lines at 45°, tangent to these arcs.

$d = .1\frac{1}{2}''$ $\quad l = \ldots 6''$

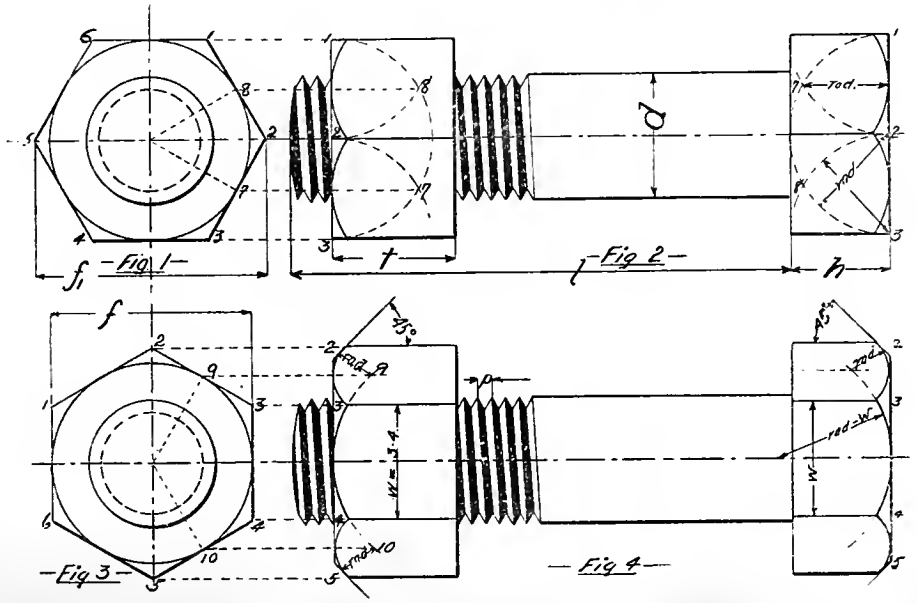

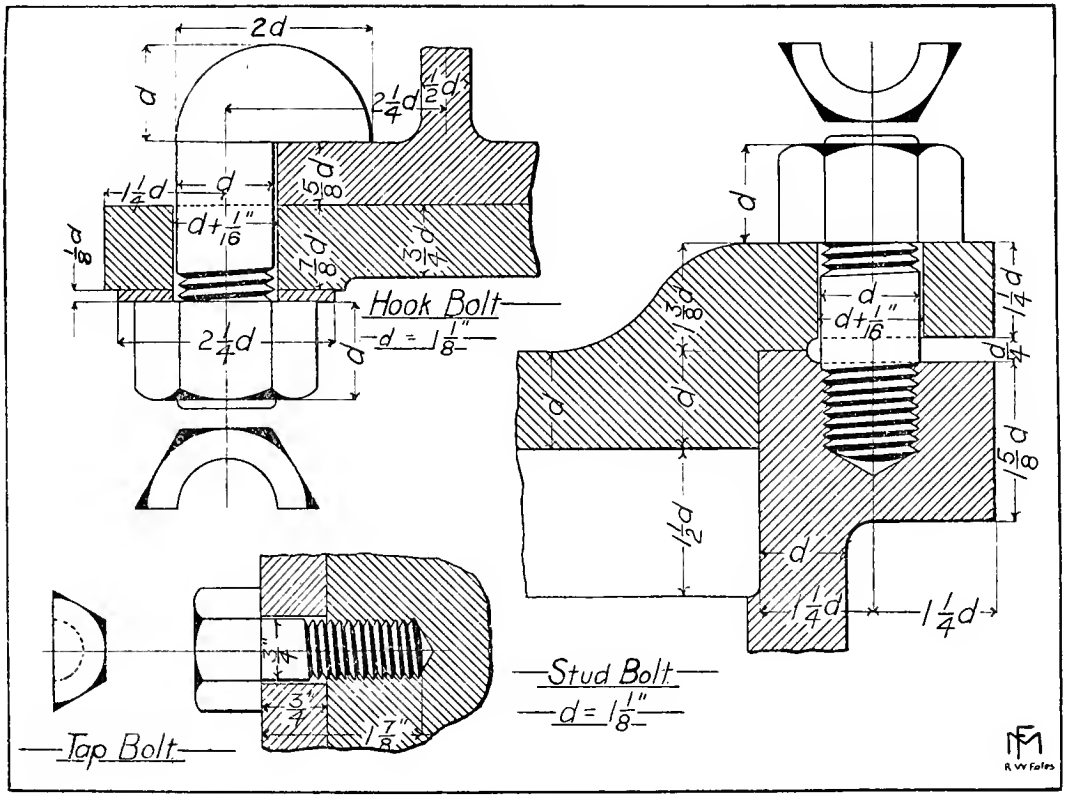
Hook Bolt
d = 1 1/8"
Stud Bolt
d = 1 1/8"
Tap Bolt
R W Fales

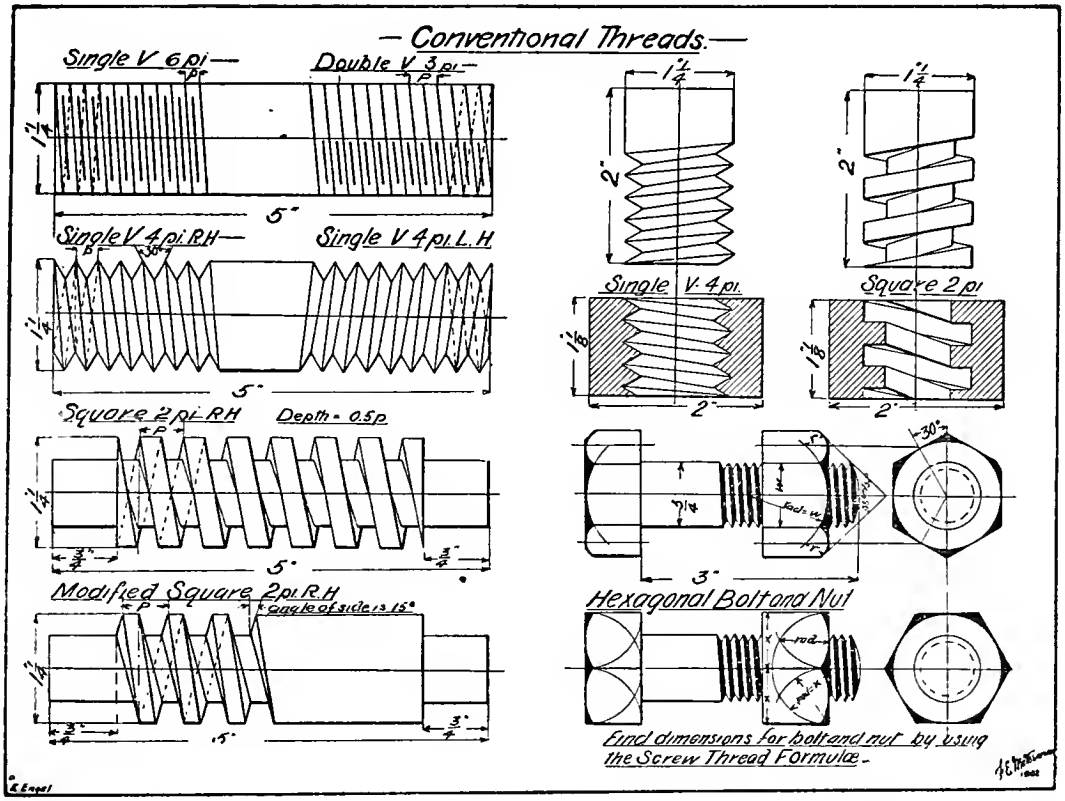
— Conventional Threads. —
Single V 6 pi
Double V 3 pi
Single V 4 pi. R.H
Single V 4 pi. L.H
Square 2 pi R.H
Depth = 0.5p
Modified Square 2 pi R.H
* Angle of side is 15°
Single V 4 pi.
Square 2 pi
Hexagonal Bolt and Nut
Find dimensions for bolt and nut by using the Screw Thread Formulæ.

STUFFING-BOX

The stuffing-box shown by the drawing is generally used for small work, such as valve spindles, etc. The outside of the stuffing-box (B) is threaded to receive a hexagonal nut (N) that fits over the gland (G). As the nut is screwed down, the gland is pressed down and compresses the packing. The proportions given are for rods up to $1\frac{1}{4}$" dia.

Let d	= .....
a =	$2.5d + .5''$
b =	$1.5d + .125''$
c =	$3d + .25''$
e =	$3.5d + .625''$
f =	$d + .125''$
g =	$.75d$
h =	$1.5c + .25''$
i =	$.25d + .0625''$
k =	$.5d$
m =	$2d + .125''$
n =	$e - .5d$
o =	$2.5d$
r =	$.6d$
s =	$.75d$
t =	$.25d$
u =	h

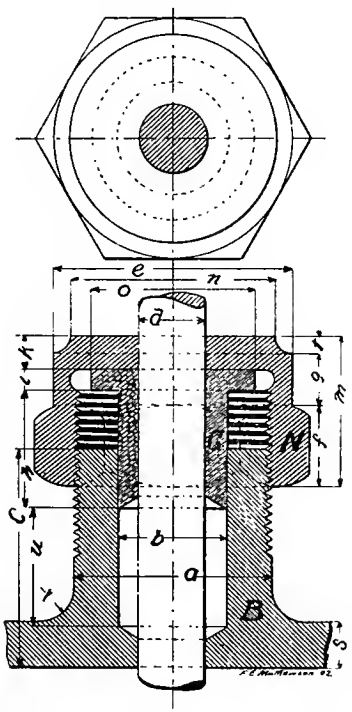

Make the number of threads per inch the same as for a bolt whose diameter is equal to the diameter of the rod.

In addition to the two views given, make a third view showing the outside of the stuffing-box.

Sketches for 1½" Globe Valve

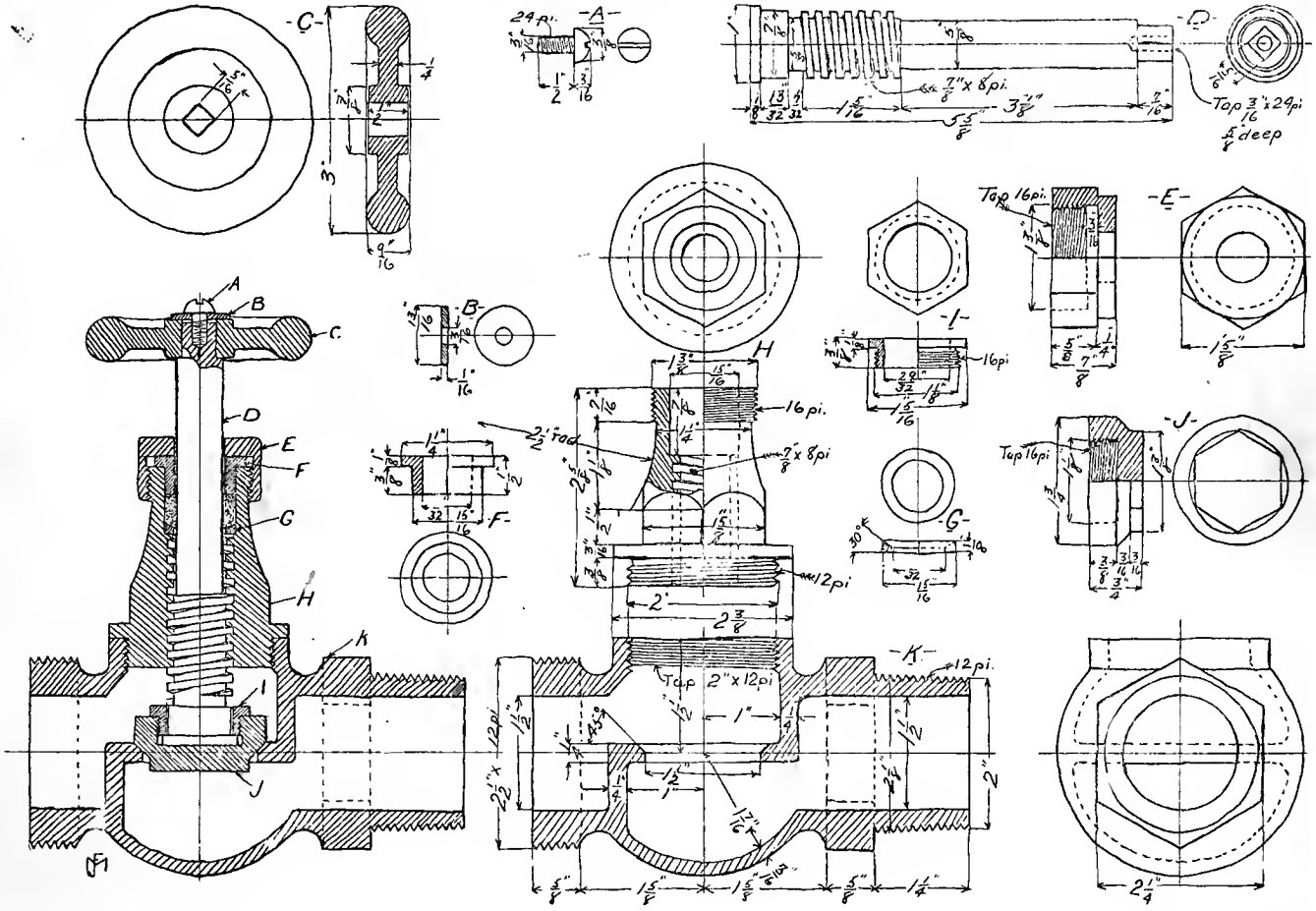

SHAFT COUPLING

The drawing shows a flange coupling, made by keying cast-iron flanges to the ends of the shafts. The following proportions, based on the diameter of the shaft, (d) may be used in drawing the coupling for shafts from 1″ to 3½″ in diameter.

Let d =	.....
a =	2.35d
b =	1.6d
c =	2d
e =	c— .25″
f =	.875d
g =	1.25d
h =	.375d
i =	.25d
j =	.375d
k =	.125d

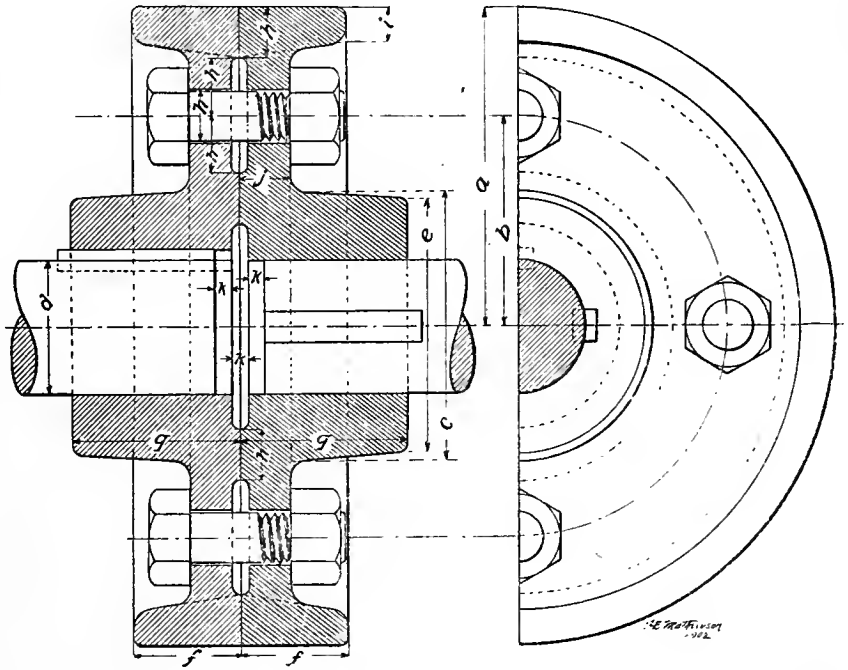

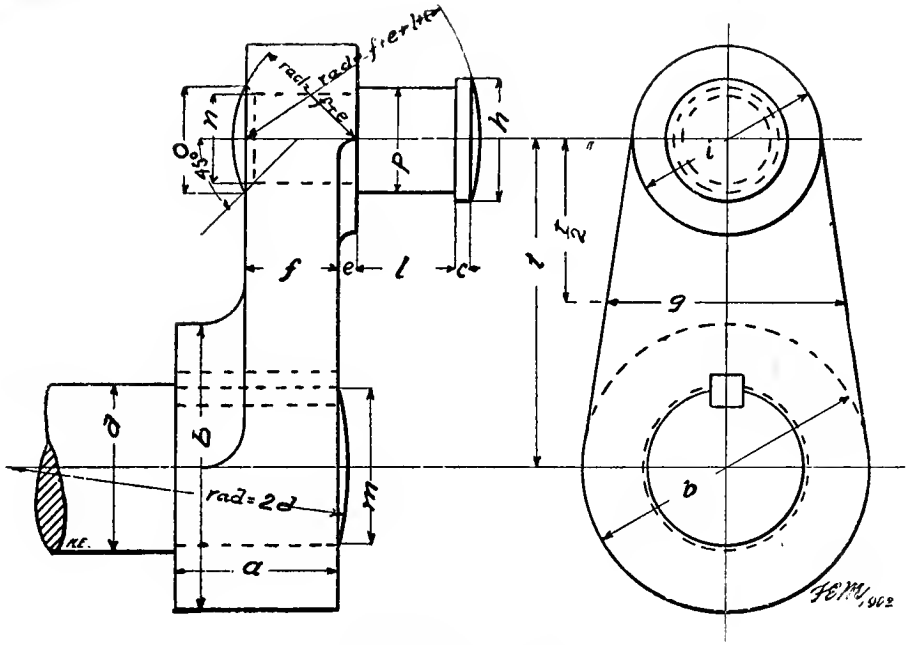

ENGINE CRANK

The drawing shows a crank designed for slow speed engines. When D = dia. of the engine cylinder, and T = the travel of the piston, the following proportions may be used.

$a =$	d	$b =$	$1.75d$	$c = .05d + .06''$	$d =$	$.5D$
$e =$	$\frac{1}{4}''$	$f =$	$.375g$	$h =$	$1.35p$	$i =$	$1.125d$
$l =$	$.26D + \frac{1}{2}''$	$m =$	$d - \frac{1}{4}''$	$n =$	$p - \frac{1}{8}''$	$o =$	$n + \frac{1}{4}''$
$p =$	$.28D$	$t =$	$.5T$	g is found by drawing lines tangent to i and b			

PIVOT or FOOT-STEP BEARING

The drawing shows a bearing designed to support the ends of vertical shafts. The end of the shaft rotates on the central disk, which may be made of steel, brass, or bronze. The brass bush prevents the shaft from moving side-ways.

The following proportions, based on the diameter of the shaft, (d) may be used in drawing the bearing.

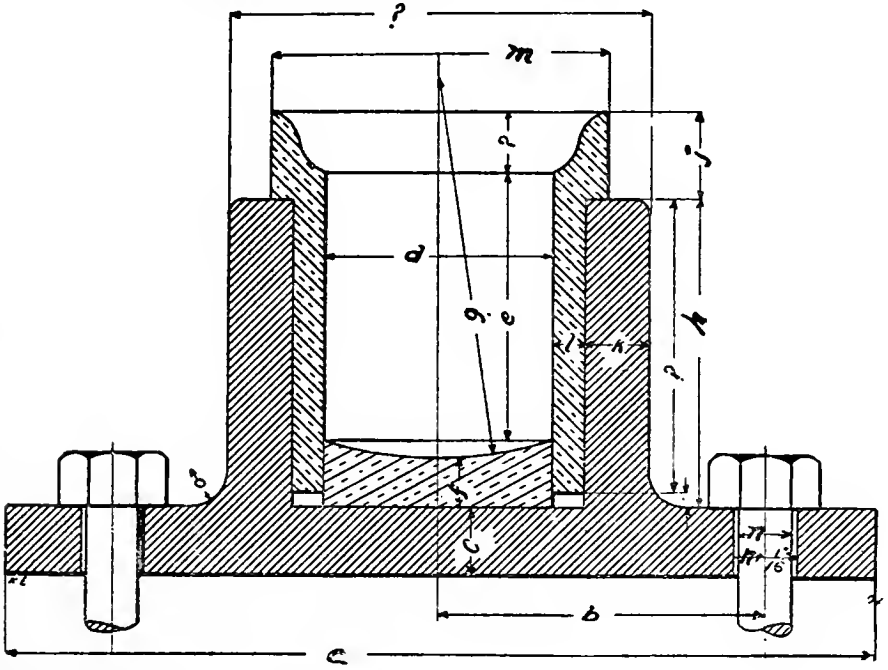

Let d =	.....
a =	$4d$
b =	$1.5d$
c =	$0.25d + 0.375''$
e =	$1.25d$
f =	$0.2d + 0.125''$
g =	$1.75d$
h =	$1.4d$
i =	$07d$
j =	$0.4d$
k =	$0.3d$
l =	$0.15d$
m =	$1.5d$
n =	$0.2d + 0.25''$
o =	$0.15d$

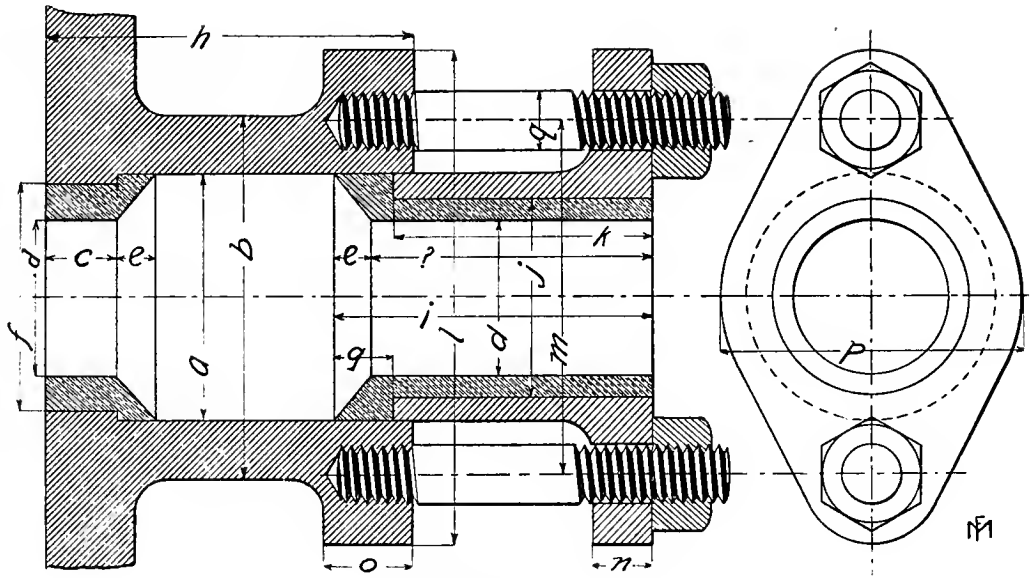

STUFFING BOX

The following proportions may be used for stuffing boxes of this style for rods up to $3\frac{1}{2}''$ dia.

d = dia. of rod

$a = 1\frac{1}{4}d + \frac{5}{8}''$	$f = 1\frac{1}{4}d + \frac{3}{8}''$	$j = 1\frac{1}{8}d + \frac{1}{4}''$	$n = \frac{1}{4}d + \frac{1}{4}''$
$b = 1\frac{3}{4}d + 1\frac{1}{8}''$	$g = e + \frac{1}{8}d$	$k = i - g$	$o = \frac{1}{3}d + \frac{1}{2}''$
$c = .1d + \frac{3}{4}''$	$h = 2d + \frac{5}{8}''$	$l = 2\frac{1}{4}d + 1\frac{3}{4}''$	$p = 1\frac{1}{2}d + \frac{3}{4}''$
$e = \frac{1}{2}c$	$i = 1\frac{1}{2}d + 1''$	$m = 1\frac{2}{3}d + 1\frac{1}{4}''$	$q = n$

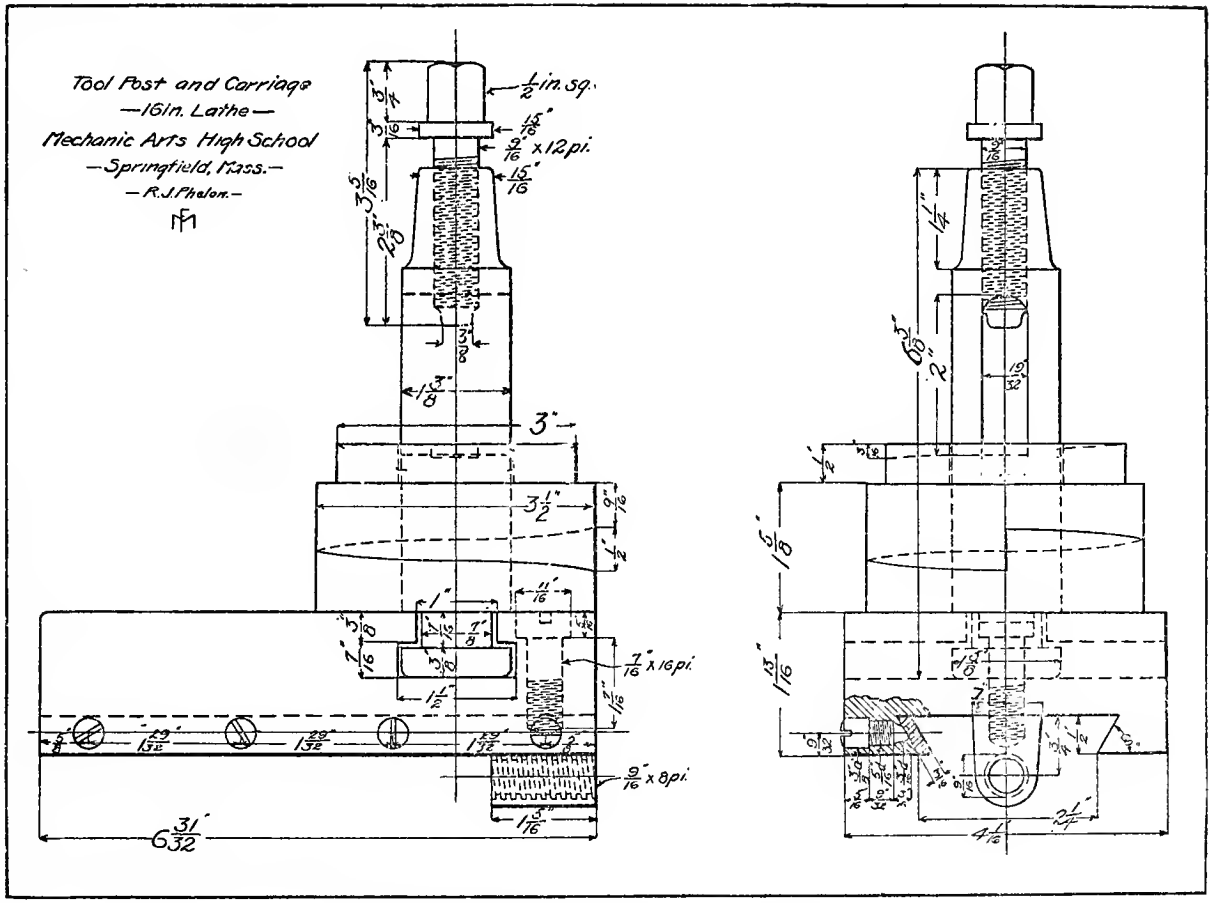

Make detail drawings of each part.

PEDESTAL BOX or BEARING

The following proportions may be used for pedestal boxes of this style for shafts up to $2\frac{1}{2}$″ dia.

$d =$ diameter of shaft,

$a =$	$2\frac{1}{4}d$	$n =$	$\frac{1}{2}d$
$b =$	$1\frac{3}{4}d$	$o =$	$\frac{5}{8}$″ (constant)
$c =$	d	$p =$	$1\frac{1}{2}d$
$e =$	$\frac{1}{4}d$	$q =$	$1\frac{1}{3}d$
$f =$	$\frac{1}{8}d$	$r =$	$\frac{1}{8}d$
$g =$	$1\frac{3}{4}d$	$s =$	$\frac{1}{8}$″ (constant)
$h =$	$2\frac{1}{2}d$	$t =$	$\frac{1}{4}d$
$i =$	$\frac{1}{4}d$	$u =$	$1\frac{1}{3}d$
$j =$	$\frac{1}{3}d$	$v =$	$\frac{1}{8}d$
$k =$	$\frac{1}{4}d + \frac{1}{4}$″	$w =$	$1\frac{1}{8}i$
$l =$	$\frac{1}{8}d$	$x =$	$\frac{7}{8}i$
$m =$	$\frac{1}{4}d + \frac{1}{8}$″	$y =$	i

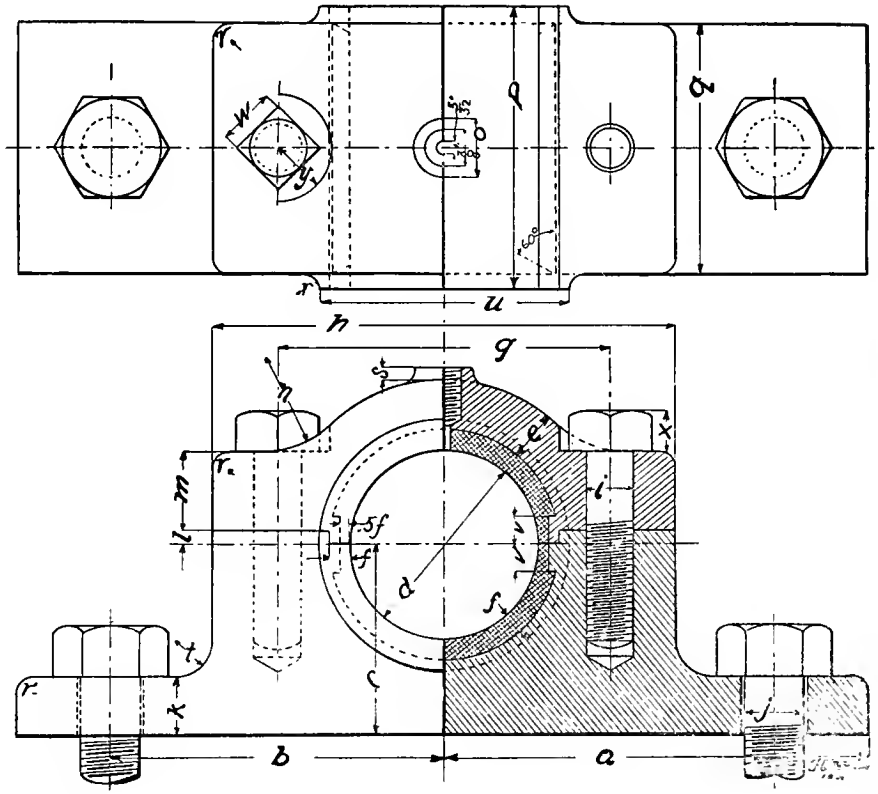

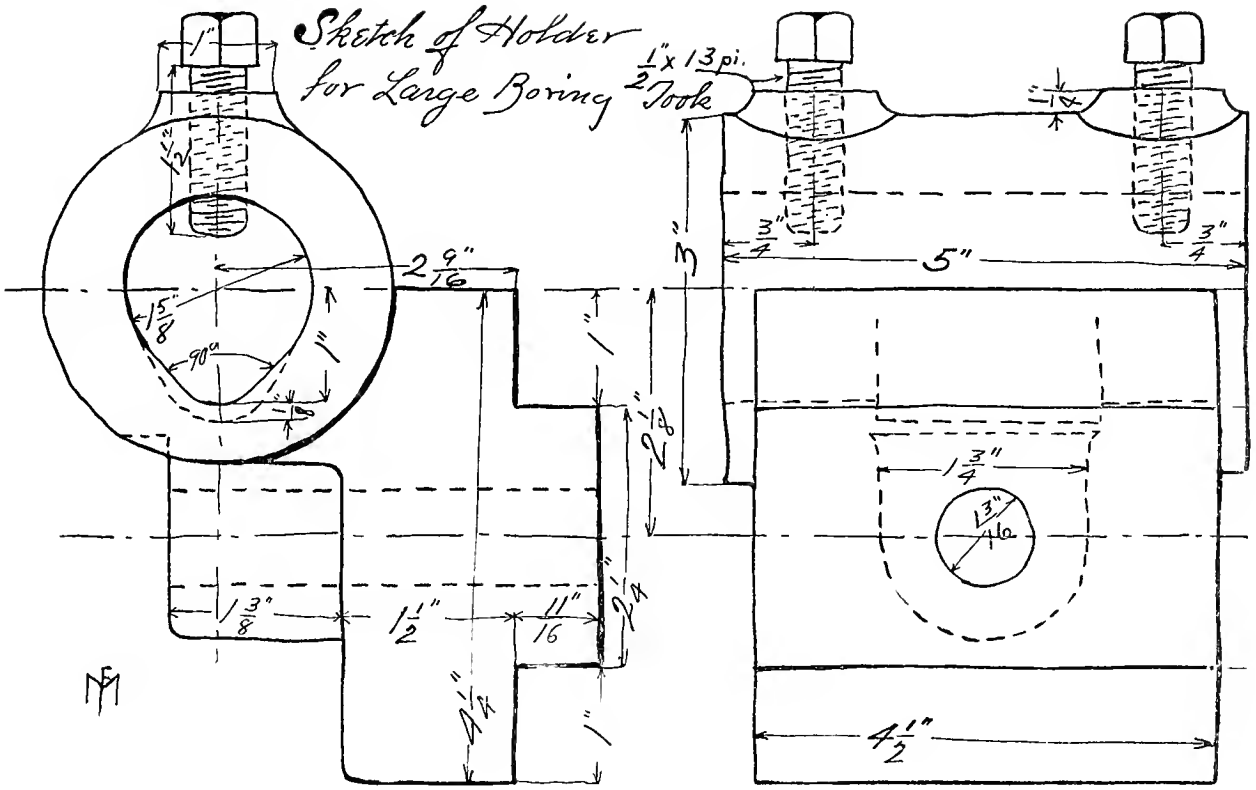
Sketch of Holder
for Large Boring Tool
1/2" x 13 pi.
1"
1 1/2"
2 9/16"
1 5/8"
90°
1"
1"
2 1/8"
2 1/4"
4 1/4"
1"
1 3/8"
1 1/2"
11/16"
3"
3/4"
5"
3/4"
1 3/4"
13/16"
4 1/2"

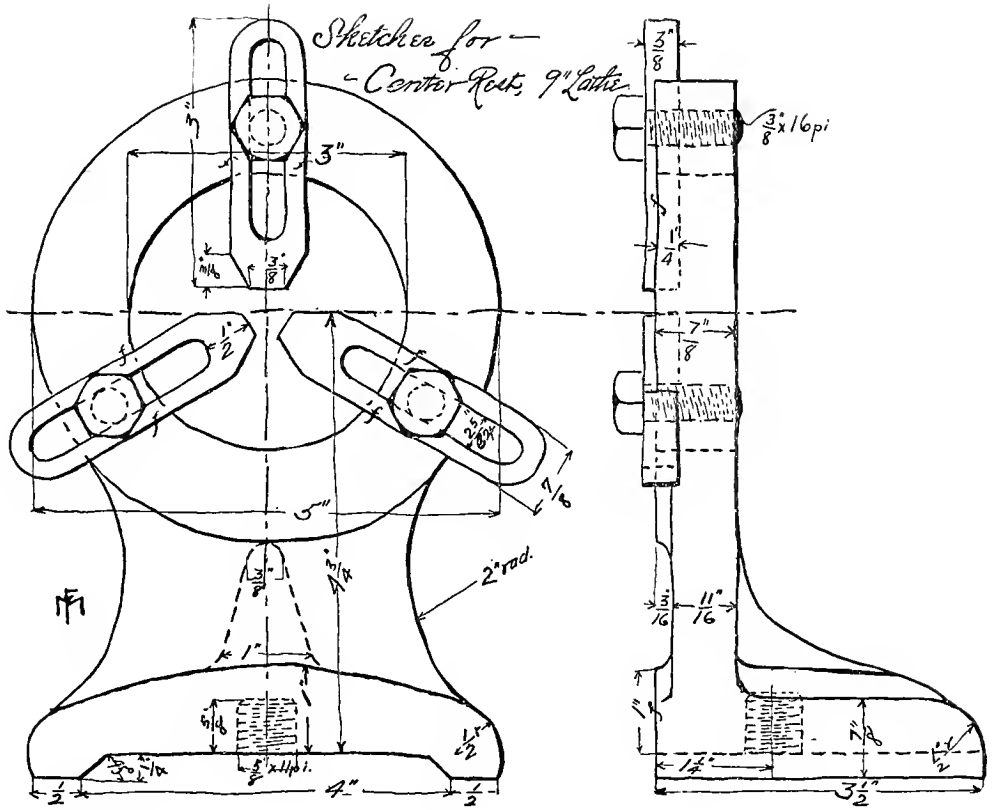
Sketches for —
— Center Rest, 9" Lathe
3"
3"
3/8"
1/2"
5"
7/8
2" rad.
4 3/4"
1"
5/8"
5/8" x 11 pi.
1/2
4"
1/2
3/8"
3/8" x 16 pi
1/4"
7/8"
3/16
11/16"
1"
1 1/4"
7/8"
3 1/2"

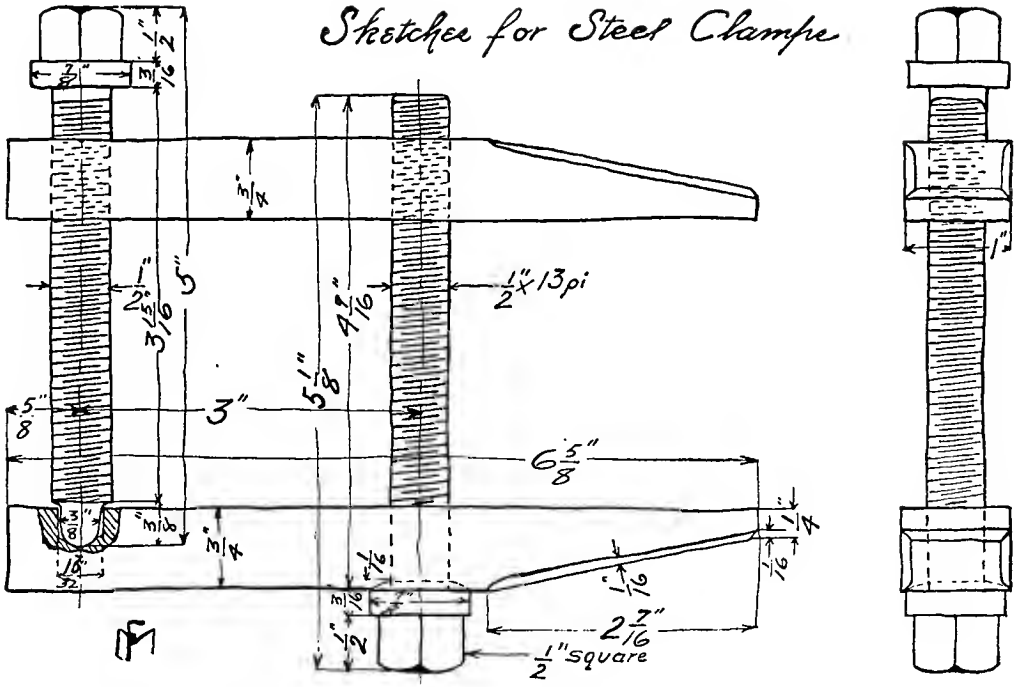
Sketches for Steel Clamps
1/2" x 13 pi
1/2" square
3"
6 5/8"
2 7/16"
5"
3 15/16"
4 9/16"
5 1/8"
1"

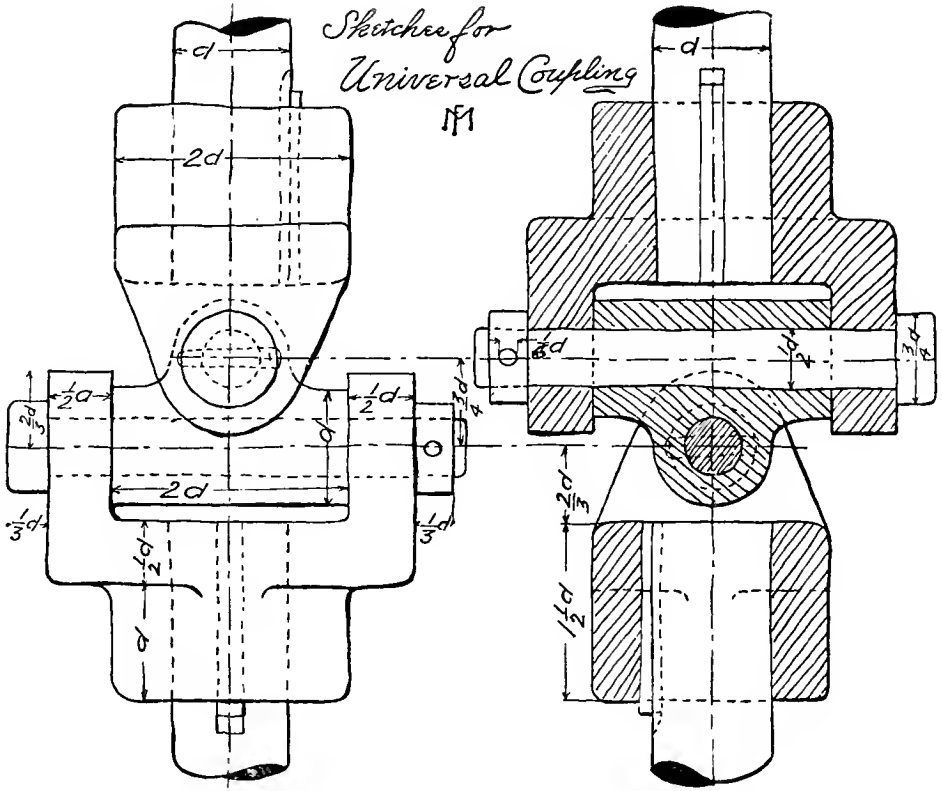
Sketches for
Universal Coupling
d
2d
$\frac{1}{2}$d
$\frac{2}{3}$d
$\frac{1}{3}$d
$\frac{3}{4}$d
$\frac{1}{2}$d
$\frac{1}{3}$d
$\frac{1}{2}$d
$\frac{2}{3}$d
$1\frac{1}{2}$d
$\frac{3}{4}$d

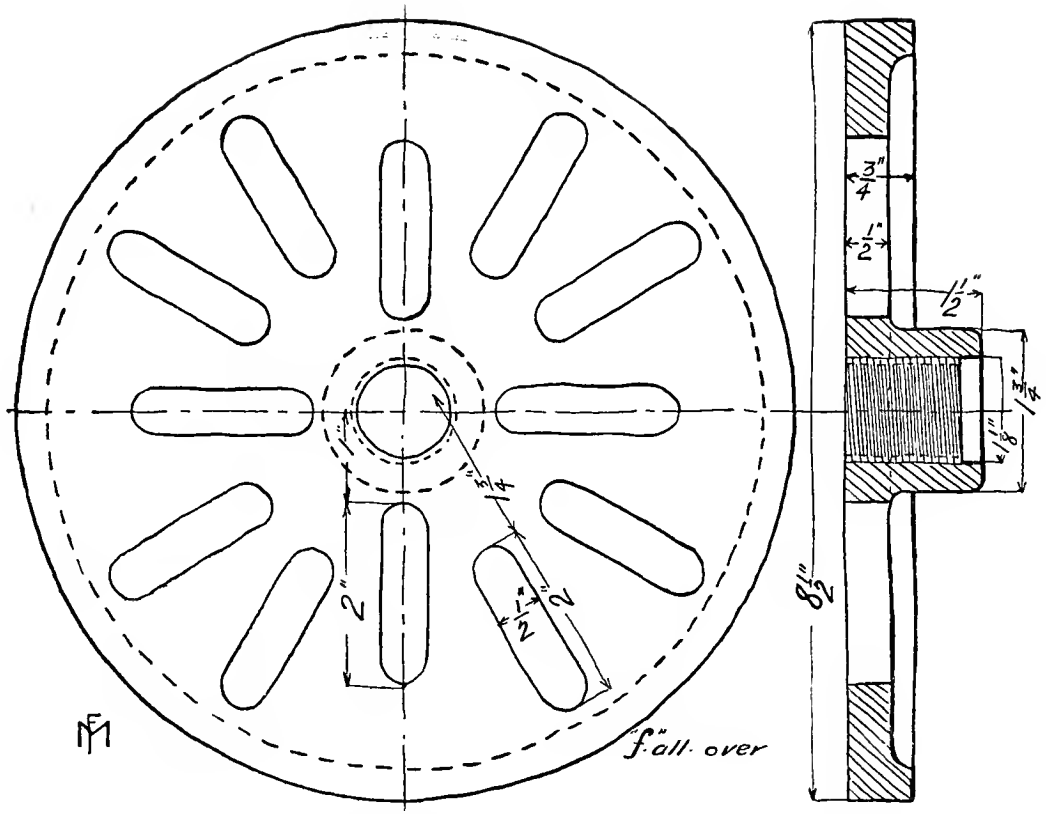

Sketch of Faceplate for 9" Speed Lathe *Thread 1 1/8" dia. 12pi.*

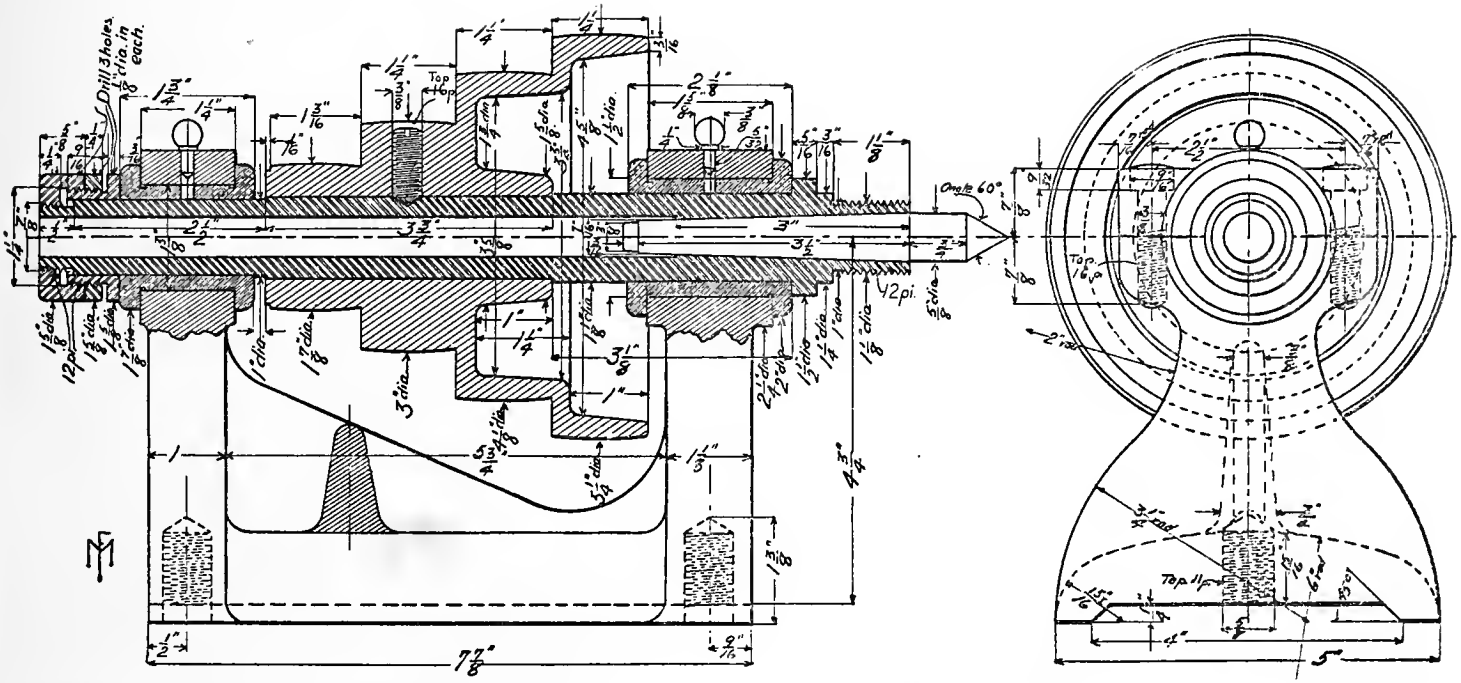

Head for 9" Speed Lathe

Make detail drawings of each part.

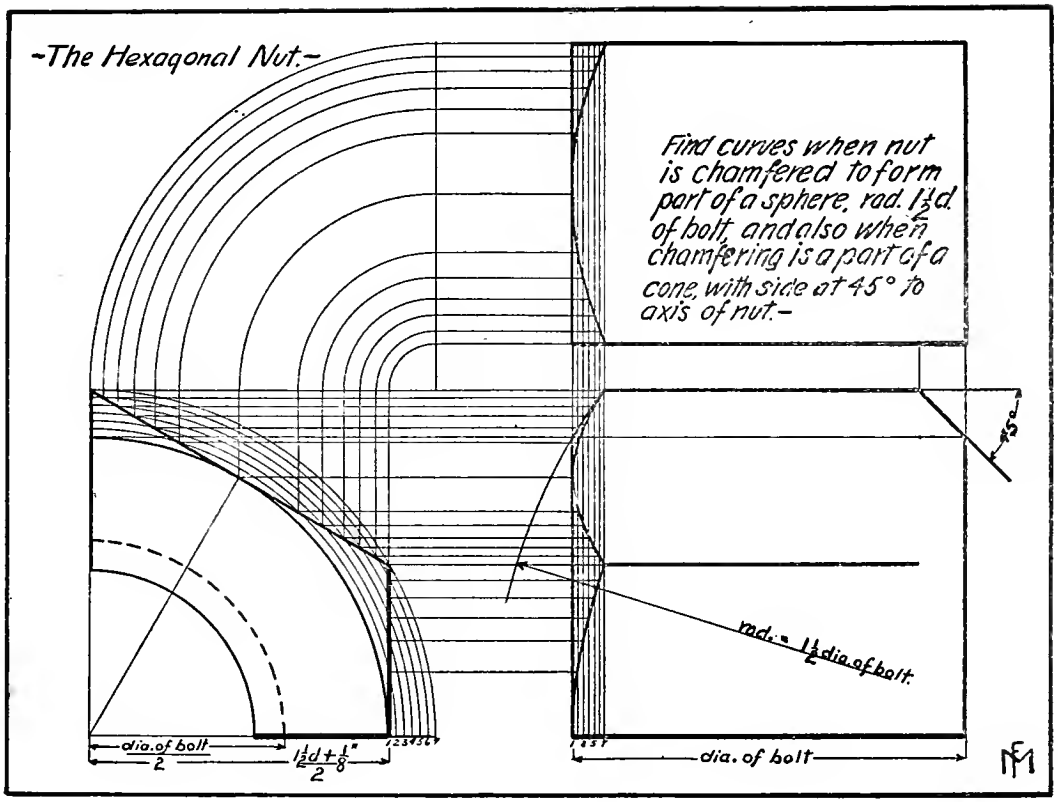
-The Hexagonal Nut.-
Find curves when nut is chamfered to form part of a sphere, rad. 1½d. of bolt, and also when chamfering is a part of a cone, with side at 45° to axis of nut.-
45°
rad. = 1½ dia. of bolt
dia. of bolt / 2
1½d + ⅛" / 2
dia. of bolt

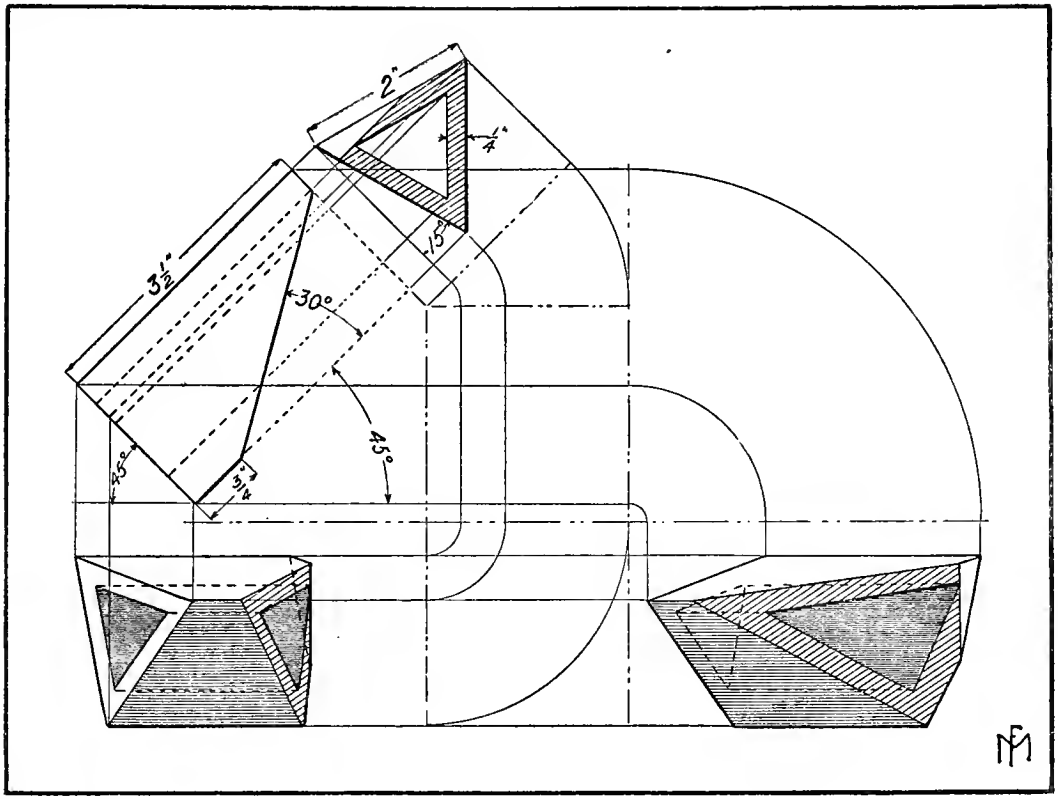
2"
1/4"
15°
3 1/2"
30°
45°
45°
3/4"

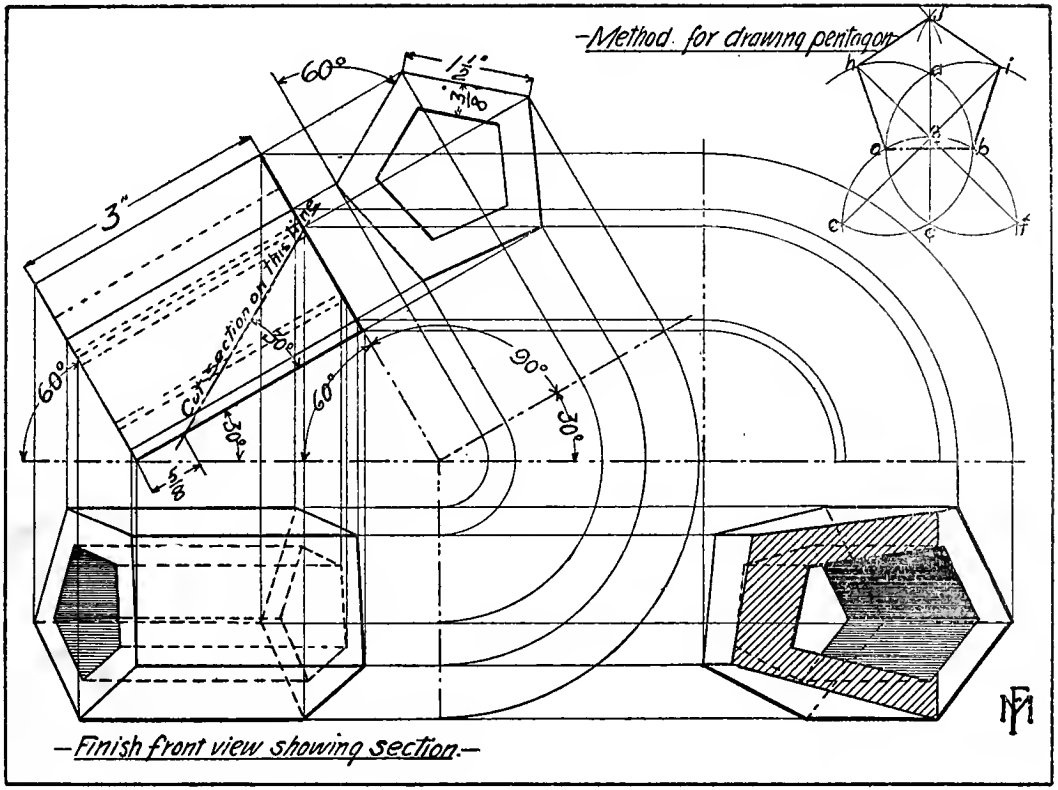
-Method for drawing pentagon-
60°
1½"
3/8"
3"
Cut section on this line
60°
30°
30°
60°
90°
30°
5/8
h
i
a
b
c
f
-Finish front view showing section.-

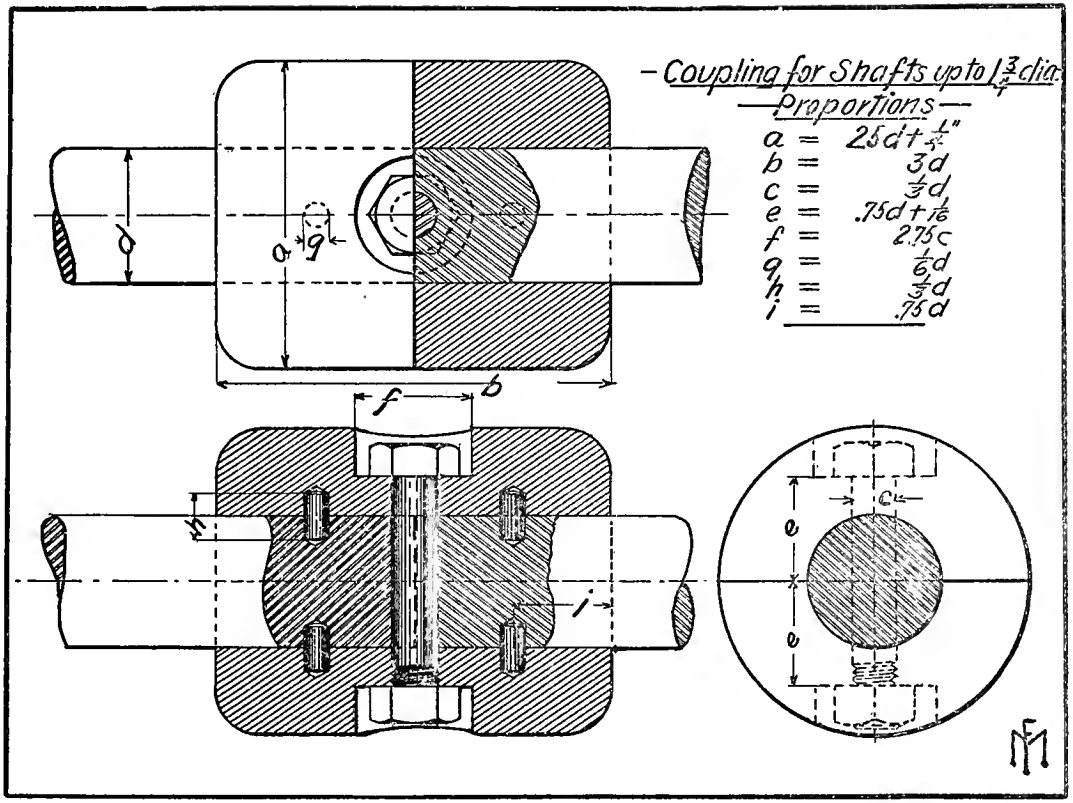
– Coupling for Shafts up to 1¾ dia.
Proportions —
a = 2.5d + ½"
b = 3d
c = ½d
e = .75d + 1/16
f = 2.75c
g = 1/6d
h = ⅓d
i = .75d
d
a
g
b
f
h
i
c
e
e

ISOMETRIC DRAWING

Isometric Drawing is based on the following fundamental principles :-

1. *There are three lines called "isometric axes," a 30° line to the right, a 30° line to the left, at the end of a vertical line.*

2. *These isometric axes represent lines that are mutually perpendicular to each other, and correspond to the three dimensions, of length, breadth and height.*

3. *A measurement on the drawing, can only be laid off parallel to one of these isometric axes.*

4. *Vertical lines in the object, are vertical in the drawing.*

5. *Parallel lines in the object, are parallel in the drawing.*

6. *Lines at right angles in the object, are shown at 60° or 120° to each other in the drawing.*

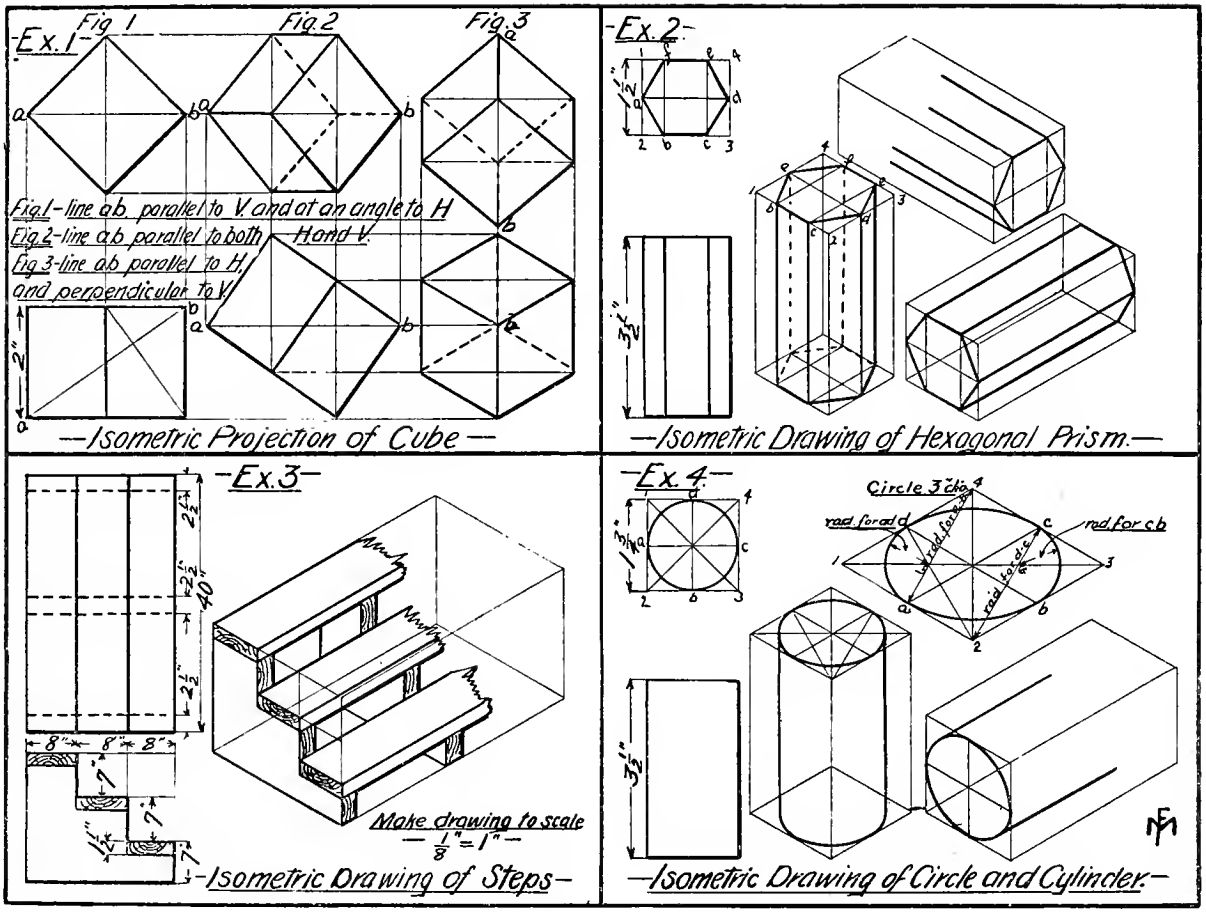
-Ex. 1-
Fig 1
Fig. 2
Fig. 3
Fig. 1 - line ab parallel to V and at an angle to H
Fig. 2 - line ab parallel to both H and V.
Fig. 3 - line ab parallel to H, and perpendicular to V.
2"
-Isometric Projection of Cube-
-Ex. 2-
-Isometric Drawing of Hexagonal Prism.-
-Ex. 3-
40"
8" 8" 8"
Make drawing to scale
- 1/8" = 1" -
-Isometric Drawing of Steps-
-Ex. 4-
Circle 3" dia.
rad. for ad
rad. for cb
-Isometric Drawing of Circle and Cylinder.-

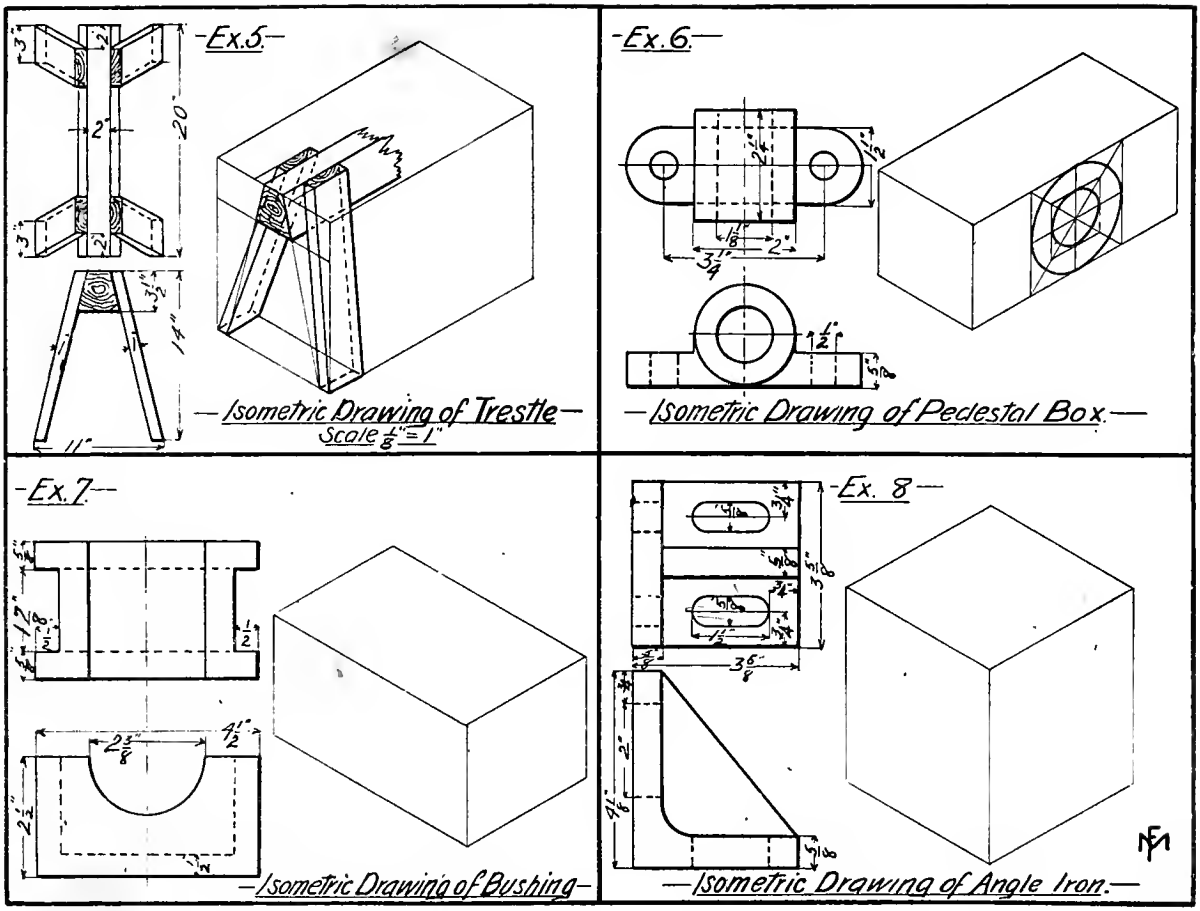

—Isometric Drawing of Trestle—
Scale ⅛"=1"

—Isometric Drawing of Pedestal Box.—

—Isometric Drawing of Bushing—

—Isometric Drawing of Angle Iron.—

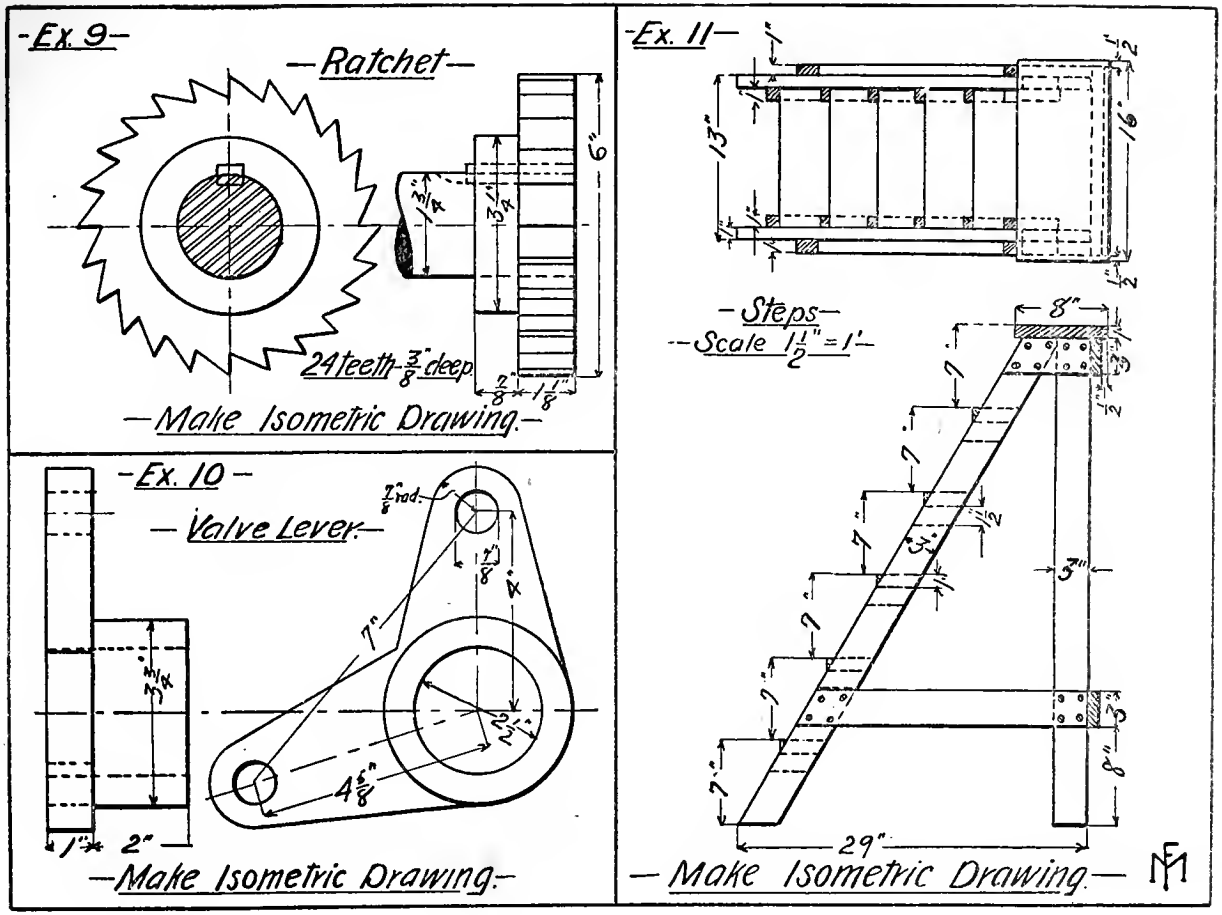
Ex. 9
Ratchet
6"
24 teeth - 3/8" deep
Make Isometric Drawing.
Ex. 10
Valve Lever
1" rad.
7"
4 5/8"
2"
Make Isometric Drawing.
Ex. 11
13"
16"
Steps
Scale 1 1/2" = 1'
8"
7"
3"
29"
Make Isometric Drawing.

MOTION.

(1) A body is moving uniformly when it moves over equal spaces in equal successive intervals of time. The rate at which it moves is called the velocity.

(2) If the body does not pass over equal spaces in equal successive intervals of time, the motion is said to be variable. If velocity increases, it is said to be accelerated. If velocity diminishes, it is said to be retarded. Variable motion may be uniformly accelerated or retarded.

(3) When a body moves forward in the same path the motion is continuous.

(4) A body moving forward and backward alternately is said to have reciprocating motion.

(5) A body giving motion to another body, either by direct or indirect contact, is called the driver. The body receiving the motion is called the follower.

(6) Rectilinear motion denotes motion in a straight line. It can be continuous or reciprocating.

(7) Rotation denotes motion around a fixed axis. This motion may be continuous or reciprocating. If the latter, it is said to be oscillating.

(8) The arrangements used for transmitting motion are known by the general term "Mechanism."

(9) The different ways by which motion may be transmitted are:

a. Sliding contact—cams, etc.
b. Rolling contact—gears, etc.
c. Rolling contact—belts, etc.
d. Lever connections.

CAMS.

A cam is a device for communicating motion to another piece by means of the action of its curved edge. This curved edge is usually the irregular face of a disc that acts as a driver to a follower in contact with it, or else it is a groove cut in a flat or curved surface.

Cams are useful in many forms of machines, as through their use complicated movements may be made which otherwise would be impossible. They have a wide use in many familiar machines—such as printing presses, sewing machines, looms, and automatic machinery of various kinds. The process of laying out cams is very simple, and the general method is illustrated in the drawing of the heart shape cam shown in Figure 2. This cam is used for converting

circular motion into uniform reciprocating motion. The throw of the cam is the distance the follower point travels through the whole or part revolution of the cam.

Let it be required to lay out a cam which shall move a follower point uniformly along a straight line 1⅝" and return in one revolution of the cam.

First lay out a diagram of the motion of the follower point; let a straight line of indefinite length (o—o', Fig. 1) represent one-half of the revolution of the cam. At one end erect a line perpendicular to the line o—o', and 1⅝" long. Connect the upper end of this line with opposite end of the line o—o', then divide the line o—o' into any number of equal divisions, and erect perpendiculars at these divisions. These divisions represent successive even intervals of time. Drawing lines parallel to oo' from the divisions on the lines o—12, we get the distance the follower point will travel in each successive even interval of time. To trace the cam curve (Fig. 2) first locate the center of the cam (c) and draw a semi-circle whose radius is the distance from the center of the cam to the follower point. Divide this semi-circle into the same number of equal parts into which the line o—o' was divided. Draw radial lines through these points of division indefinitely beyond the semi-circle. Then on line o—12 lay off the divisions representing the travel of the follower point, and draw arcs of circles to the corresponding radial lines. Drawing a line through the points of intersection of arcs and radial lines, we get the outline of a curve which will give the desired movement to the follower point. To complete the cam, it will be necessary to draw the opposite side of the cam in the same manner.

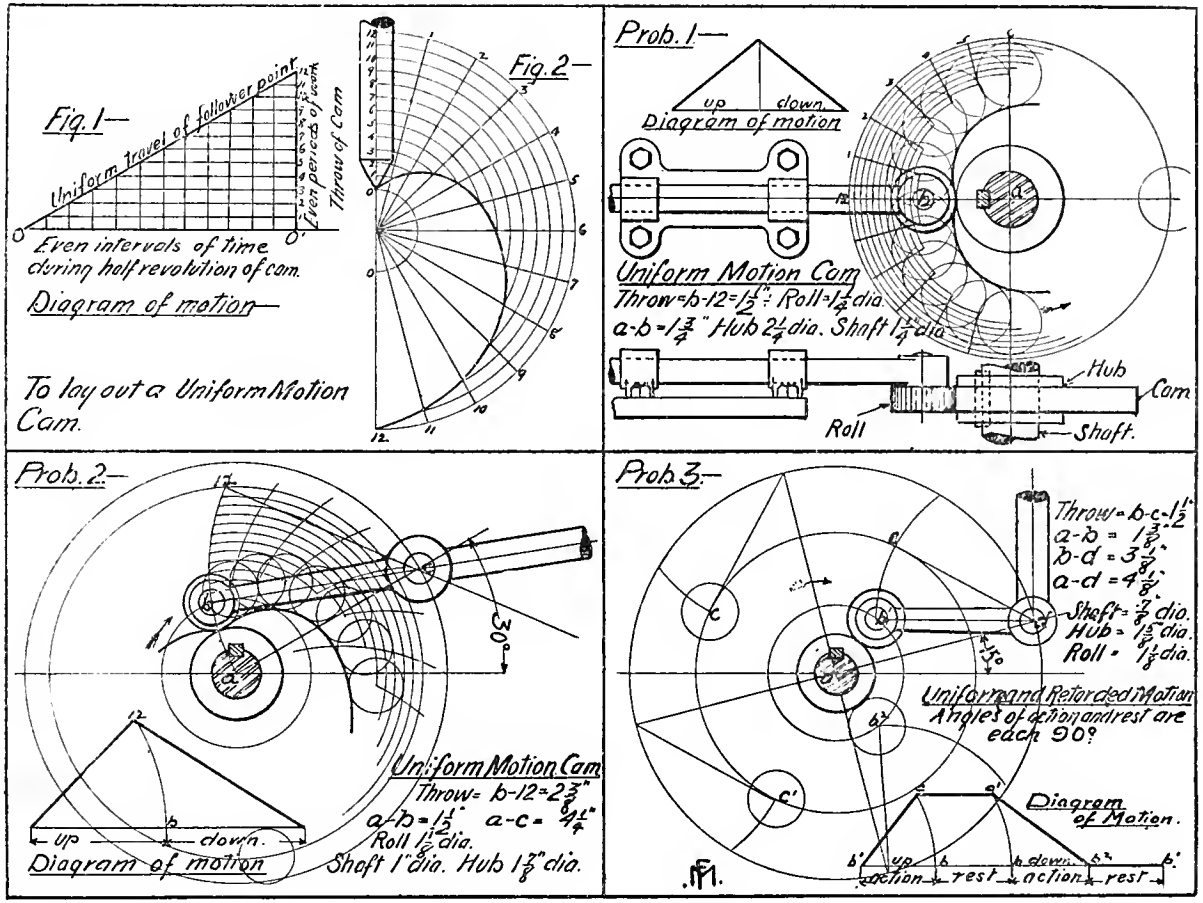
Fig. 1—
Uniform travel of follower point
Even periods of cam
Even intervals of time during half revolution of cam.
Diagram of motion—
To lay out a Uniform Motion Cam.
Fig. 2—
Throw of Cam
Prob. 1—
up
down
Diagram of motion
Uniform Motion Cam
Throw = b-12 = 1½" ; Roll = 1¼ dia.
a-b = 1¾" Hub 2¼ dia. Shaft 1¼ dia.
Hub
Cam
Roll
Shaft.
Prob. 2—
30°
Uniform Motion Cam
Throw = b-12 = 2 3/8"
a-b = 1½" a-c = 4¼"
Roll 1⅜ dia.
Shaft 1" dia. Hub 1⅞" dia.
up
down.
Diagram of motion
Prob. 3—
Throw = b-c = 1½"
a-b = 1⅜"
b-d = 3½"
a-d = 4⅞"
Shaft = ⅞ dia.
Hub = 1⅝ dia.
Roll = 1⅜ dia.
150°
Uniform and Retarded Motion
Angles of action and rest are each 90°
Diagram of Motion.
up action
rest
down action
rest

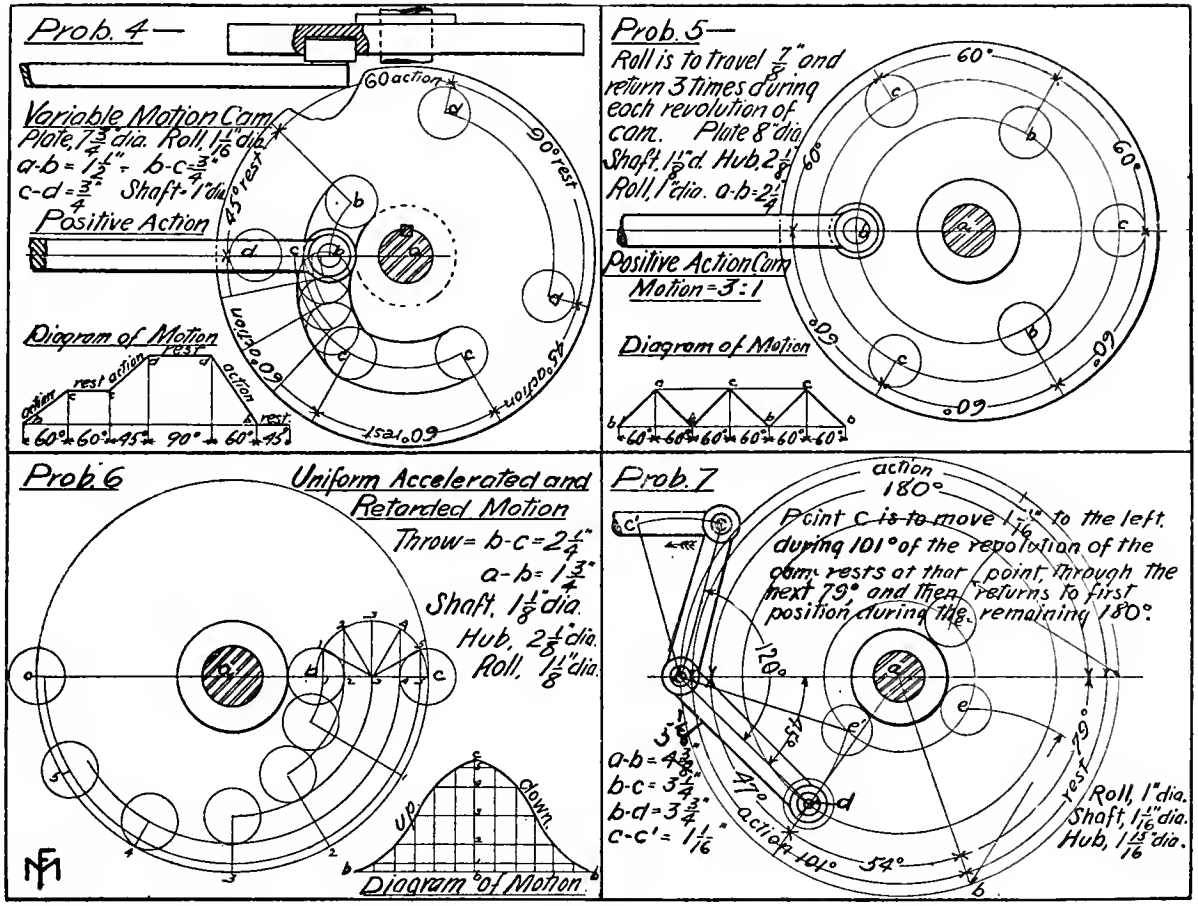
Prob. 4—
Variable Motion Cam
Plate, 7 3/4" dia. Roll, 1 1/16" dia.
a-b = 1 1/2" b-c = 3/4"
c-d = 3/4" Shaft = 1" dia.
Positive Action
60 action
90° rest
45° rest
60° rest
45° action
60° action
Diagram of Motion
action
rest
action
rest
action
rest
60° 60° 45° 90° 60° 45°
Prob. 5—
Roll is to travel 7/8" and return 3 times during each revolution of cam. Plate 8" dia.
Shaft, 1 1/8" d. Hub, 2 1/8"
Roll, 1" dia. a-b = 2 1/4"
Positive Action Cam
Motion = 3:1
Diagram of Motion
60° 60° 60° 60° 60° 60°
Prob. 6
Uniform Accelerated and Retarded Motion
Throw = b-c = 2 1/4"
a-b = 1 3/4"
Shaft, 1 1/8" dia.
Hub, 2 1/8" dia.
Roll, 1 1/8" dia.
up
down
Diagram of Motion
Prob. 7
action
180°
Point c is to move 1 1/16" to the left, during 101° of the revolution of the cam; rests at that point, through the next 79°, and then returns to first position during the remaining 180°.
120°
45°
47°
action 101°
54°
79°
rest
a-b = 4 3/8"
b-c = 3 1/4"
b-d = 3 3/4"
c-c' = 1 1/16"
Roll, 1" dia.
Shaft, 1 1/16" dia.
Hub, 1 15/16" dia.

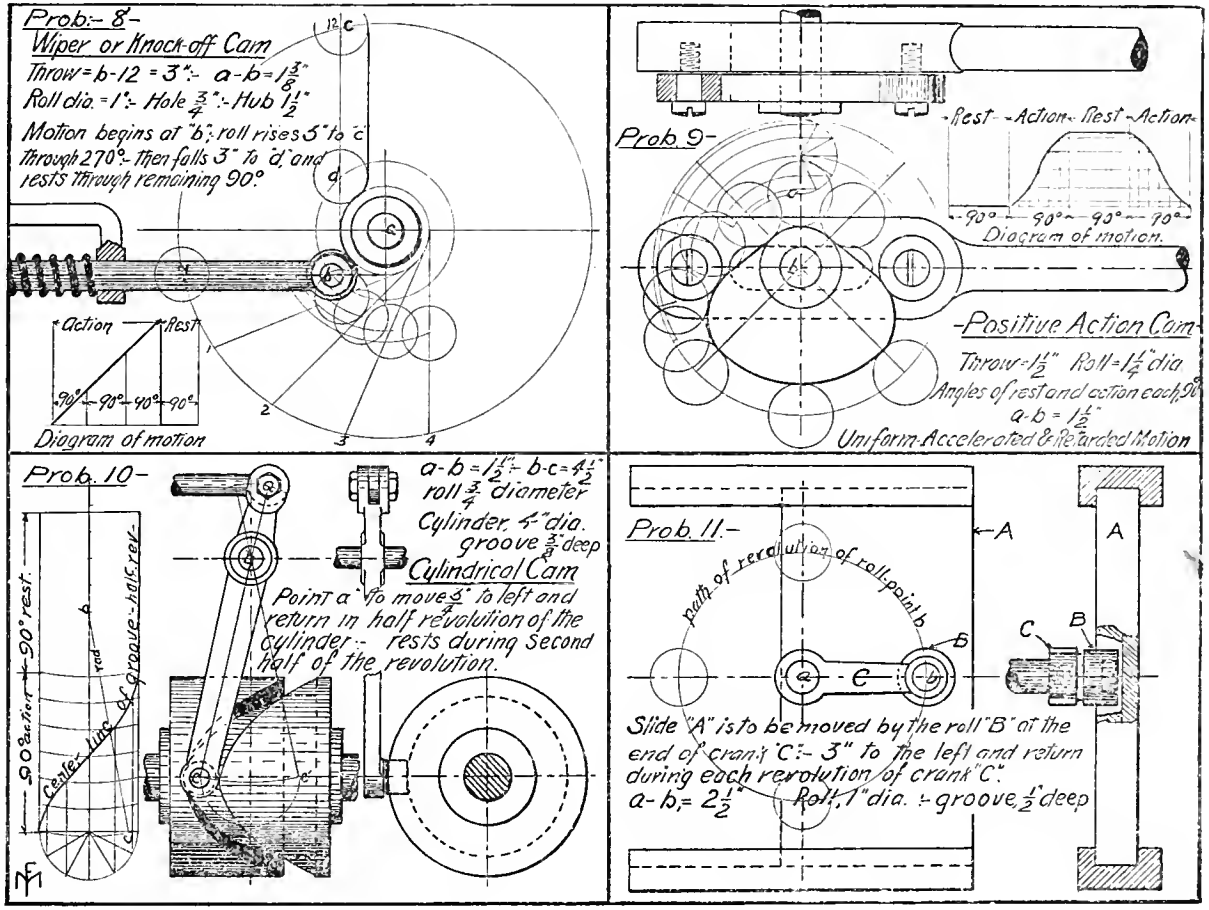
Prob:- 8-
Wiper or Knock-off Cam
Throw = b-12 = 3" :- a-b = 1 3/8"
Roll dia. = 1" :- Hole 3/4" :- Hub 1 1/2"
Motion begins at "b"; roll rises 3" to "c" through 270°- then falls 3" to "d" and rests through remaining 90°
Action
Rest
90° 90° 90° 90°
Diagram of motion
Prob. 9-
Rest - Action - Rest - Action
90° 90° 90° 90°
Diagram of motion.
Positive Action Cam
Throw = 1 1/2" Roll = 1 1/4" dia
Angles of rest and action each 90°
a-b = 1 1/2"
Uniform Accelerated & Retarded Motion
Prob. 10-
a-b = 1 1/2" - b-c = 4 1/2"
roll 3/4" diameter
Cylinder, 4" dia.
groove 3/8" deep
Cylindrical Cam
Point a" to move 3" to left and return in half revolution of the cylinder :- rests during second half of the revolution.
90° action + 90° rest.
Center line of groove - half rev.
rod
Prob. 11-
path of revolution of roll point b
A
B
C
Slide "A" is to be moved by the roll "B" at the end of crank "C" :- 3" to the left and return during each revolution of crank "C".
a-b = 2 1/2"
Roll 1" dia. :- groove 1/2" deep

Draw the path of motion of point a during the revolution of the crank.

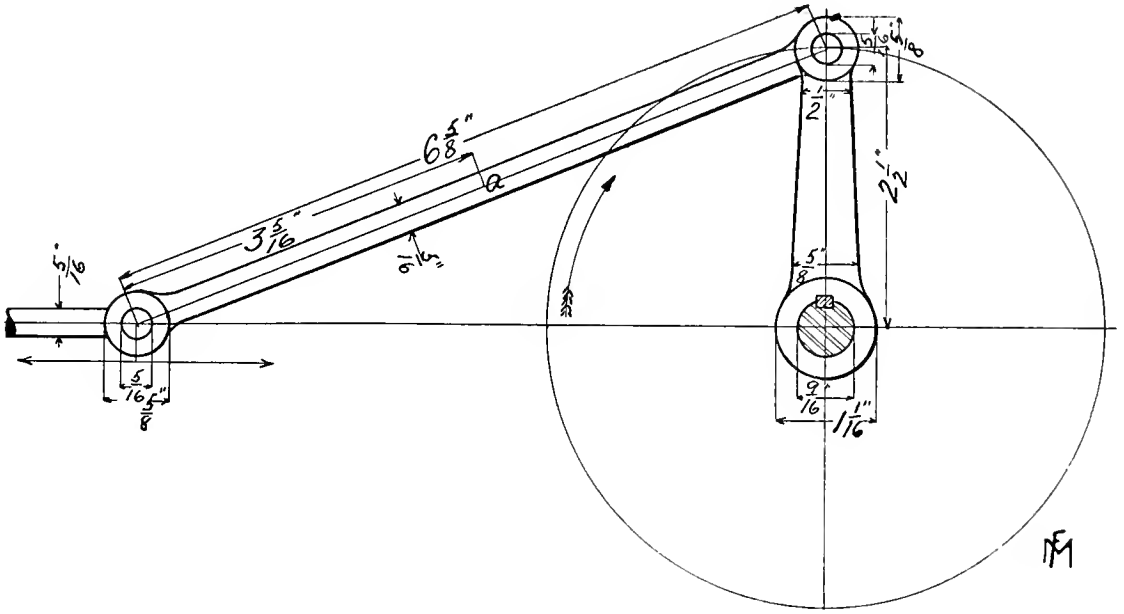

Draw the path of motion of point a during the revolution of the crank.

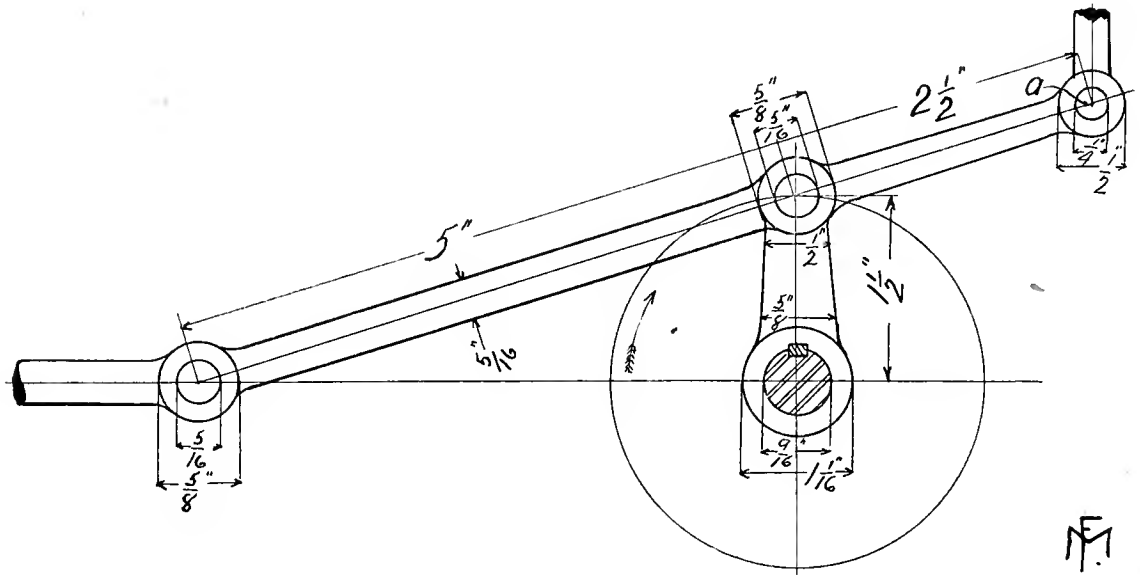

(a) When ab = bc, with a and b as fixed points, find the path of motion, and distance through which d can move each side of line ad.

(b) If, when ab = bc, with a and b as fixed points, b and d should be connected by a link crossing c, what would be the path of motion, and distance through which c can move each side of line ac.

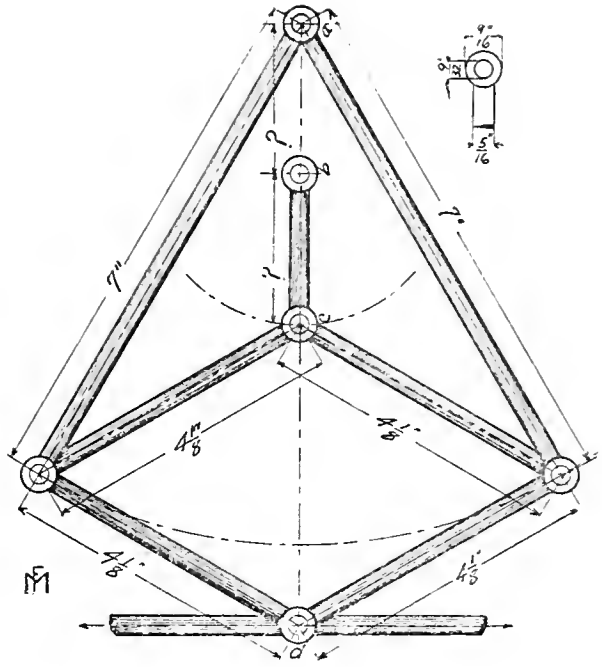

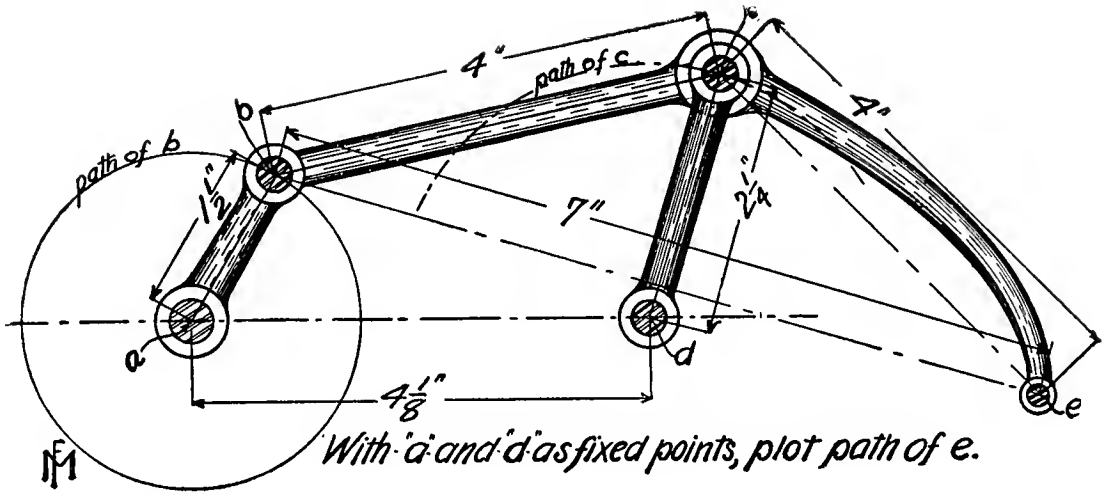

With 'a' and 'd' as fixed points, plot path of e.

GEAR WHEELS.

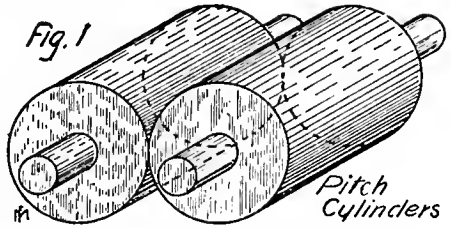

If two cylinders on parallel axes touch each other, and we exert power on one cylinder, the adhesion of its surface under pressure to the surface of the other will make that turn also. If these cylinders are of the same size, each will make the same number of turns, but if one be twice as large as the other, the smaller will make two turns while the larger makes one, and this relative difference in velocity is regulated by the relative difference in the size of the respective cylinders.

This is the primary theory of gearing, and would be very useful in mechanics if the one cylinder would always turn the other without loss of power occasioned by slipping. To overcome this, on the periphery of these cylinders cut equi-distant grooves. These *grooves* are called *Dedenda* (to take from, to deduct). The *spaces* between these grooves are called *Lands*. Upon these lands *add* parts. These parts are called *Addenda* (to add, to increase). A *land* and its *addendum* is called a *Tooth*. A toothed cylinder or wheel is called a *Gear*. Two or more gears with teeth engaging each other are called a *Train*. A line between the centers of two wheels is called the *Line of Centers*. A circle touching the addenda is called the Addendum Circle, which represents the extreme circumference of the gear wheels, the original circumference of the cylinders without teeth is called the *Pitch Line* or *Pitch Circle*, which represents approximately

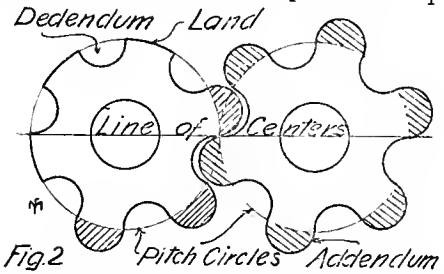

the center of the tooth from top to bottom. The circle exists geometrically in every gear, and, in the study of gear wheels, *the problem is to shape the teeth so that the pitch circles will just touch each other without slipping.*

The groove between two teeth is called a *Space.* In cut gears, the width of a space and the thickness of a tooth at the pitch circle should be equal.

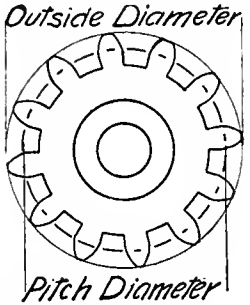

Fig. 3

The distance between the center of one tooth and the center of the next tooth, measuring along the pitch circle, is the *Circular Pitch;* that is, the *circular pitch* is equal to one tooth and one space. If the circumference of the pitch line or circle is divided by the number of teeth in the gear, the quotient will be the *circular pitch.*

The diameter of a gear wheel is always taken at the *pitch circle,* unless otherwise stated. When the teeth of gears engage to the proper distance, they are said to be *in gear.* If two wheels or gears are to be geared together, their teeth must be the same pitch.

Diametral Pitch is the number of teeth in a gear, *per inch of diameter of pitch circle;* hence, if the number of teeth in a gear be divided by the diameter of the pitch circle, the quotient will be the diametral pitch.

$$\text{Diameter of pitch circle, for circular pitch} = \frac{\text{cir. pi.} \times \text{no. of teeth}}{3.1416}$$

$$\text{for diametral pitch} = \frac{\text{no. of teeth} \times 1''}{\text{dia. pi.}}$$

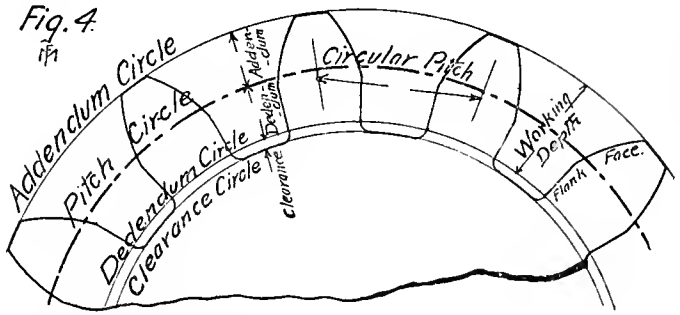

Fig. 4

Face and Flank: That part of the contour of a tooth which lies outside its pitch circle is called the *Face* of the tooth; and that part which lies within the pitch circle is called the *Flank.*

Arc and Angle of Action. The angle through which the wheel turns, while one of its teeth is in contact with the engaging tooth of its mate, is called the *Angle of Action;* the arc of the pitch circle, by which it is measured, is called the *Arc of Action.* The latter must be equal to the circular pitch, so that each tooth may continue in gear until the next one begins to act; in practice it should be considerably greater.

Addendum = *circular pitch* ÷ 3
Addendum = 1″ ÷ *diametral pitch*
Dedendum = *addendum*
Clearance = *addendum* ÷ 8
Tooth = *addendum* + *dedendum* + *clearance*
Outside dia. = *pi. dia.* + 2 × *addendum*

Backlash. Practically, the teeth of two engaging wheels are made of the same thickness; but were workmanship so perfect that each tooth and space be made exactly equal, this would create contrary friction and consequent loss of power; hence, the space must be left a little wider than the tooth. The difference is called *Backlash,* and should be as minute as it is practicable to make it.

Clearance. Theoretically, the depth of a space is equal to the distance from the addendum circle to the dedendum circle, but in order to let the teeth of the mating wheels pass the bottom of the space without friction, the depth of the space is made a little greater. The difference is called *Clearance.*

Pitch Point is the mathematical point where the pitch circles and line of centers of two engaging toothed wheels meet.

Spur Gears.

Those gears connecting parallel shafts and whose tooth elements are straight lines parallel to the axis of the gear.

Rack and Pinion Gears.

A rack may be considered as a wheel having an infinite diameter. The pitch line of a rack is, therefore, a straight line, and for every revolution of the pinion the rack will travel a distance equal to the circumference of the pinion.

SYSTEMS OF GEARING.

There are two systems of gearing, known as the *involute,* or single curve system, and the *cycloidal,* or double curve system.

THE CYCLOIDAL SYSTEM.

In mathematics a *cycloid* is the path described by a point on the circumference of a circle as the circle rolls upon a straight line. The circle is called the *generating* circle. When the generating circle rolls upon the outside of another circle the curve described by any point on the generating circle is called an *epicycloid.* If the generating circle rolls on the inside of another circle, the curve generated by any point on the circumference of the generating circle is called the *hypocycloid.* If the *diameter* of the generating circle is just one-half of the circle inside of which it rolls, the hypocycloid will be a *straight line.*

In drawing epicycloidal teeth it is necessary that the diameter of the generating circle should be the same for all gears running together. The diameter of the generating circle should be equal to the radius of the pitch circle of a gear of 12 teeth of the given pitch, so that the 12-tooth gear has radial flanks.

To Draw the Epicycloidal Tooth.

From any point (a) on the pitch circle draw the epicycloid and hypocycloid curves, as in Fig. 5. Lay off circular pitch on pitch circle and draw addendum, dedendum and clearance circles. The part of the curved

Fig. 5

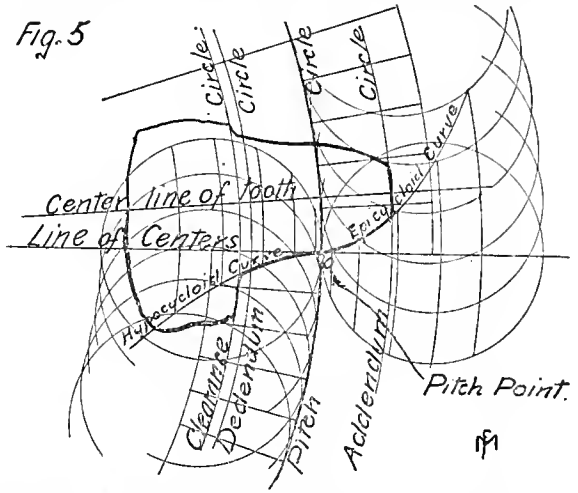

outline between the addendum and dedendum circles is the outline of the cycloidal tooth. Find center line of tooth and draw it in the opposite side of tooth by meas-

L. of C.

uring from the center line of tooth:—the tooth is rounded into the clearance line by drawing an arc of a circle with radius equal to the clearance.

Prob. 1 Draw outline of 1 tooth of a gear that has 18 teeth, 3″ cir. pi., epicycloidal form.

Prob. 2 Draw outline of 3 teeth of 24th. gear and 3 teeth of 12th. pinion in mesh, 2″ cir. pi., epicycloidal form.

THE INVOLUTE SYSTEM.

Mechanically the *involute* is the curve that would be drawn by a pencil point at the end of a thin band that will not stretch and that is drawn tight while being unwound from a cylinder.

The *Standard Involute Tooth* is the interchangeable tooth having an angle of action of fifteen degrees to a line perpendicular to the line of centers of a pair of gear wheels.

The *Base Circle* is the circle to which the involute that forms the outline of the tooth is drawn. The radius of the base circle is smaller than that of the pitch circle, and is found by drawing a circle tangent to the line of action.

The *Face* of the involute tooth is formed by the involute curve from the base circle to the addendum circle.

The *Flank* of the involute tooth is a straight radial line from base circle to the dedendum circle and rounding it into the clearance circle—See Fig. 6.

To DRAW THE INVOLUTE TOOTH.

Fig. 6

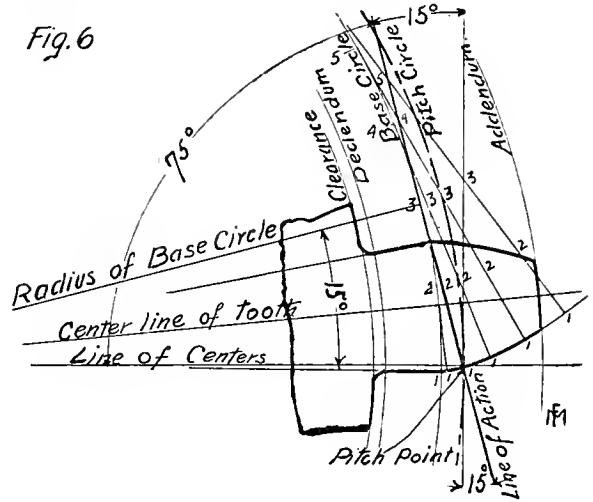

Draw in order the pitch circle, line of action, radius of base circle, base circle, involute curve from base

circle, and radial flank of tooth. Then draw, in order, the addendum, dedendum, and clearance circles; lay off the circular pitch, on pitch circle; find center line of tooth, and draw in opposite side of tooth by measuring from the center line of tooth.

Prob. 3 Draw outline of 3 teeth of 16th. gear and 3 teeth of 12th. pinion in mesh, 1 dia. pi., involute form.

ODONTOGRAPHS.

The construction of the gear tooth is not always accomplished by finding points through which the curve should pass and then drawing the curve through these points; but the tooth outline is found by means of an odontograph.

An odontograph is a method or an instrument for simplifying the construction of the curve, generally by finding centers for approximating circular arcs without finding points on the curve.

The most practical and accurate methods of approximating the involute and cycloidal curves by means of circular arcs are those devised by Mr. George B. Grant, and called *Grant's Odontograph.*

GRANT'S CYCLOIDAL ODONTOGRAPH.

GRANTS THREE POINT ODONTOGRAPH
Standard Cycloidal Teeth
Interchangeable Series
From a Pinion of Ten Teeth to a Rack

Number of Teeth in the Gear	For One Diametral Pitch — For any other pitch divide by that pitch				For One Inch Circular Pitch — For any other pitch multiply by that pitch			
	Faces		Flanks		Faces		Flanks	
	Rad	Dis A	Rad	Dis B	Rad	Dis A	Rad	Dis B
10	199	02	-800	400	62	01	-255	127
11	200	04	-1105	650	63	01	-334	207
12	201	06	∞	∞	64	02	∞	∞
13-14	204	07	1510	943	65	02	480	300
15-16	210	09	786	346	67	03	250	110
17-18	214	11	613	220	68	04	195	70
19-21	220	13	512	157	70	04	163	50
22-24	226	15	450	113	72	05	143	36
25-29	233	16	410	96	74	05	130	29
30-36	240	19	380	72	76	06	120	23
37-48	248	22	352	63	79	07	112	20
49-72	260	25	333	54	83	08	106	17
73-144	283	28	314	44	90	09	100	14
145-300	292	31	300	38	93	10	95	12
Rack	296	34	296	34	94	11	94	11

The lengths of the radii of the arcs and the location of their centers are determined by the pitch and the number of teeth of the gear, in conjunction with a table of factors that apply to gears of all sizes from a 10 tooth pinion to a rack.

Note:- The Odontograph Tables and notes are from "Grant's Treatise on Gear Wheels" by permission from Mr. Grant.

The base of the odontograph is a describing circle whose diameter is equal to the radius of the 12-tooth pinion. A gear line laid out by its use will, therefore, work satisfactorily with any gear having the same pitch and general tooth dimensions, and with theoretical curves constructed with a describing circle whose diameter is equal to the radius of a 12-tooth pinion.

After drawing the pitch, addendum, dedendum and clearance circles and spacing the pitch circle for the teeth, the circles on which lie centers of the arcs (See Fig. 7) are to be laid out. These circles are concentric

Fig. 7

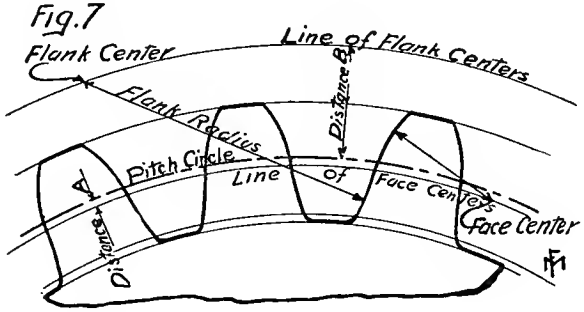

with the pitch circle, and their distances from the pitch circle are found from the odontograph table.

To find the distance from the pitch circle, for the line of face centers for a diametrical pitch gear, use the numbers headed *"Diametrical Pitch,"* and select from the column headed *"Distances A,"* under the heading *"Faces,"* the number in the same horizontal line as the number corresponding to the number of teeth in the gear, which is found in the column headed *"Number of Teeth."* This number divided by the diametral pitch gives the distance in inches from the pitch circle to the circle of face centers. The distance *"B"* from the pitch circle to the circle of flank centers is found by dividing the number in the column headed *"Distance B"* under the heading *"Flanks,"* and in the same horizontal line as the number corresponding to the number of teeth in the gear, by the diametral pitch.

For a circular pitch gear, the numbers headed, *"Multiply by the Circular Pitch,"* are to be used, and the several distances and radii are formed by multiplying the numbers by the circular pitch.

Prob. 4 Draw 22th. spur, and 10th. pinion gears 3 dia. pi., epicycloidal form, using the Grant Odontograph. Gears are $2\frac{1}{2}$" face, and keyed on $1\frac{3}{8}$" shafts.

GRANT'S ODONTOGRAPH FOR THE INVOLUTE SYSTEM.

To draw the tooth, lay off the pitch, addendum, dedendum and clearance lines, and space the pitch line for the teeth. Draw the base line one-sixtieth of the pitch diameter inside the pitch line. Take the tabular face radius, after multiplying or dividing as is required by the table, and draw in all the faces, from the pitch line to the addendum line from centers on the base line. Take the tabular flank radius, and draw in all the flanks from the pitch line to the base line. Draw straight radial flanks from the base line to the root line, and round them into the clearance line. (See Fig. 8.)

GRANT'S INVOLUTE ODONTOGRAPH
Standard Interchangeable Tooth. Centers on Base Line

Number of Teeth	Divide by the Diametral Pitch		Multiply by the Circular Pitch	
	Face Rad	Flank Rad	Face Rad	Flank Rad
10	2.28	.69	.73	.22
11	2.40	.83	.76	.27
12	2.51	.96	.80	.31
13	2.62	1.09	.83	.34
14	2.72	1.22	.87	.39
15	2.82	1.34	.90	.43
16	2.92	1.46	.93	.47
17	3.02	1.58	.96	.50
18	3.12	1.69	.99	.54
19	3.22	1.79	1.03	.57
20	3.32	1.89	1.06	.60
21	3.41	1.98	1.09	.63
22	3.49	2.06	1.11	.66
23	3.57	2.15	1.13	.69
24	3.64	2.24	1.16	.71
25	3.71	2.33	1.18	.74
26	3.78	2.42	1.20	.77
27	3.85	2.50	1.23	.80
28	3.92	2.59	1.25	.82
29	3.99	2.67	1.27	.85
30	4.06	2.76	1.29	.88
31	4.13	2.85	1.31	.91
32	4.20	2.93	1.34	.93
33	4.27	3.01	1.36	.96
34	4.33	3.09	1.38	.99
35	4.39	3.16	1.39	1.01
36	4.45	3.23	1.41	1.03
37 — 40	4.20		1.34	
41 — 45	4.63		1.48	
46 — 51	5.06		1.61	
52 — 60	5.74		1.83	
61 — 70	6.52		2.07	
71 — 90	7.72		2.46	
91 — 120	9.78		3.11	
121 — 180	13.38		4.26	
181 — 360	21.62		6.88	

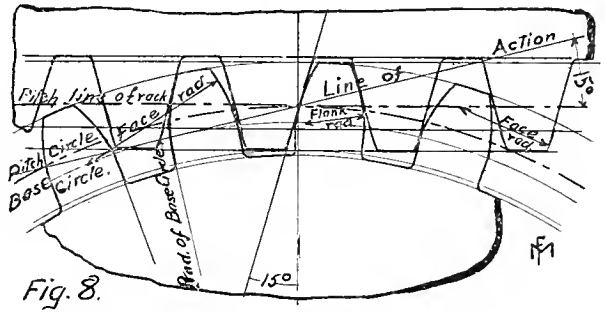

SPECIAL RULE FOR THE INVOLUTE RACK.

Draw the sides of the rack tooth as straight lines to the line of centers "*coc*" at an angle of 15°. Draw the outer half "*ab*" of the face, one quarter of the whole

length of the tooth, from a center on the pitch line, and with a radius of 2.10 inches *divided* by the diametral pitch .67 inches multiplied by the circular pitch.

The construction of the rack is shown in Fig. 8.

ANNULAR OR INTERNAL GEARS.

Fig. 9

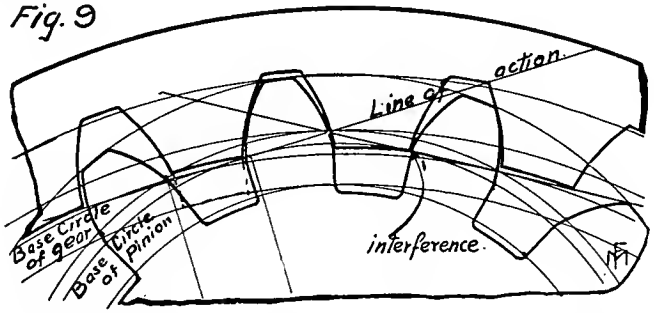

Internal Gears are those having teeth cut inside of the rim. Use the involute odontograph for the internal gear exactly the same as for external gears; but care must be taken to cut off the tooth at the interference point "*i*" of the pinion (See Fig. 9). The point of the tooth may be left off altogether or rounded over to give the appearance of a long tooth. The pinion tooth may be filled in and just clear the truncated tooth of the gear. The curves of the internal tooth and its pinion may best be drawn by points, for the odontographic tooth is not so well adapted to the place as the true tooth, and no correction is needed for interference in the true tooth outlines.

Prob. 5 Draw 25th. spur, 17th. pinion, and rack gears 4 dia. pi., involute form, using the Grant Odontograph. Gears are $2\frac{1}{8}$" face, and keyed on shafts.

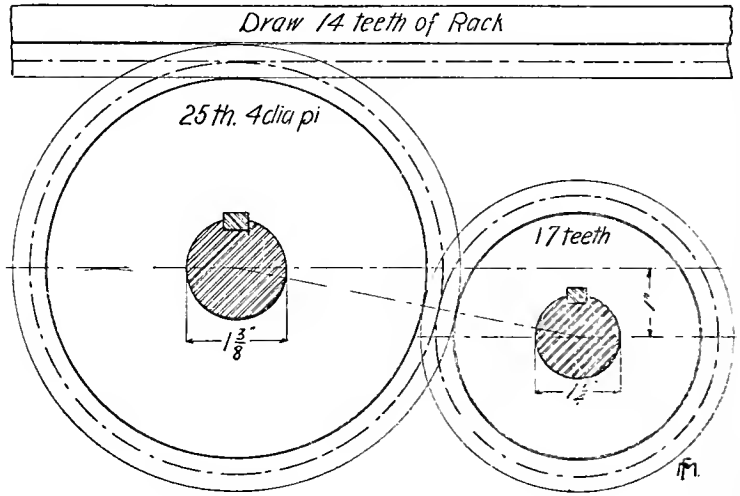

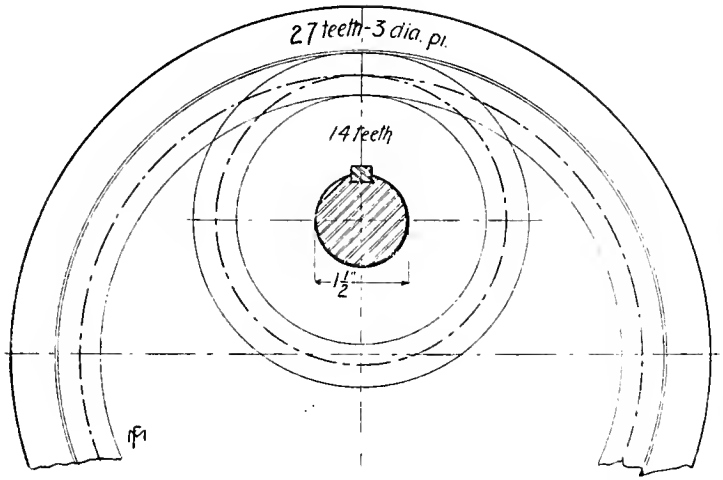

Prob 6 Draw internal, and pinion gears, 3 dia. pi., 27 and 14 teeth, involute form, using the Grant Odontograph.

BEVEL GEARS.

In drawing spur gears in the epicycloidal system, the tooth curves are generated by rolling generating cylinders upon pitch cylinders. In bevel gearing the pitch surfaces are cones which when in rolling contact have their apexes in a common point; and it may be assumed that the tooth surfaces are generated by generating cones rolling upon the pitch cones.

In spur gearing the teeth of the two gears bear along a straight line perpendicular to the plane of the paper. In bevel gearing the teeth are in contact along straight lines, but these lines are perpendicular to the surface of a sphere, and all of them pass through the center of the sphere, which is at the point where the apexes of the two pitch cones meet.

In Fig. 10 let *C O B* represent a pitch cone, the part *C D E B* being the pitch surface of the bevel gear and let *A O C* be the generating cone. If we suppose the generating cone describes the tooth surface *m n o p*, by rolling upon the pitch cone, the line *n o* representing the outer edge of the tooth will lie upon the surface of a sphere whose radius is *o n;* for the point *n* which describes this line is always at a fixed distance from the center *o*, hence every point on the line *n—o* is

equally distant from *o*, and in a spherical surface every point is equally distant from a point within called the center. It therefore follows that *n*—*o* must lie upon a spherical surface.

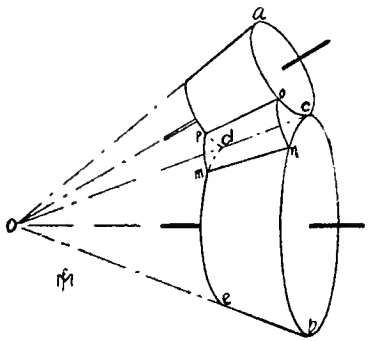

To be theoretically exact, the tooth curves should be traced upon the surface of a sphere, as shown in Fig. 11. This method is not practical, however, and has no advantage over what is known as Tredgold's approximation, which is much simpler and is universally used. By this method the tooth curves are drawn on cones tangent to the spheres at the pitch lines of the gears, as shown in Fig. 12. The process is simply to develop the surface of the cones, the developed surfaces being represented by *A B C* and *C D E* in the figure. The length of the arc *A B C* is equal to the circumference of the pitch circle *A' C*, and the arc *C D E* is equal to the circumference of the pitch circle *C E'*. The gear teeth are then drawn upon the developed surfaces precisely as for the spur gears of the same pitch and diameter.

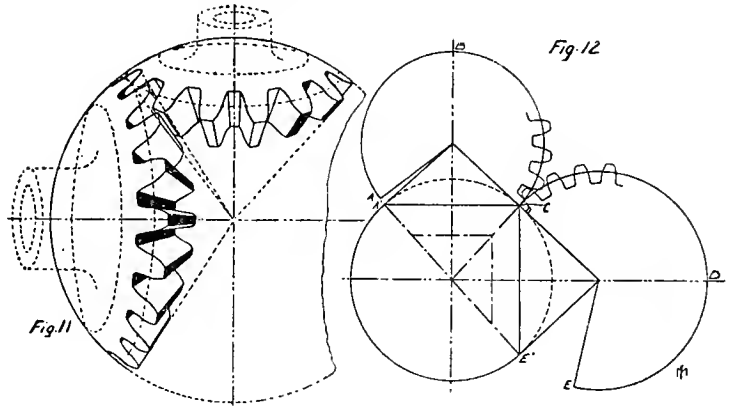

The method of laying out the bevel gear blank is shown in Fig. 13.

Fig. 13

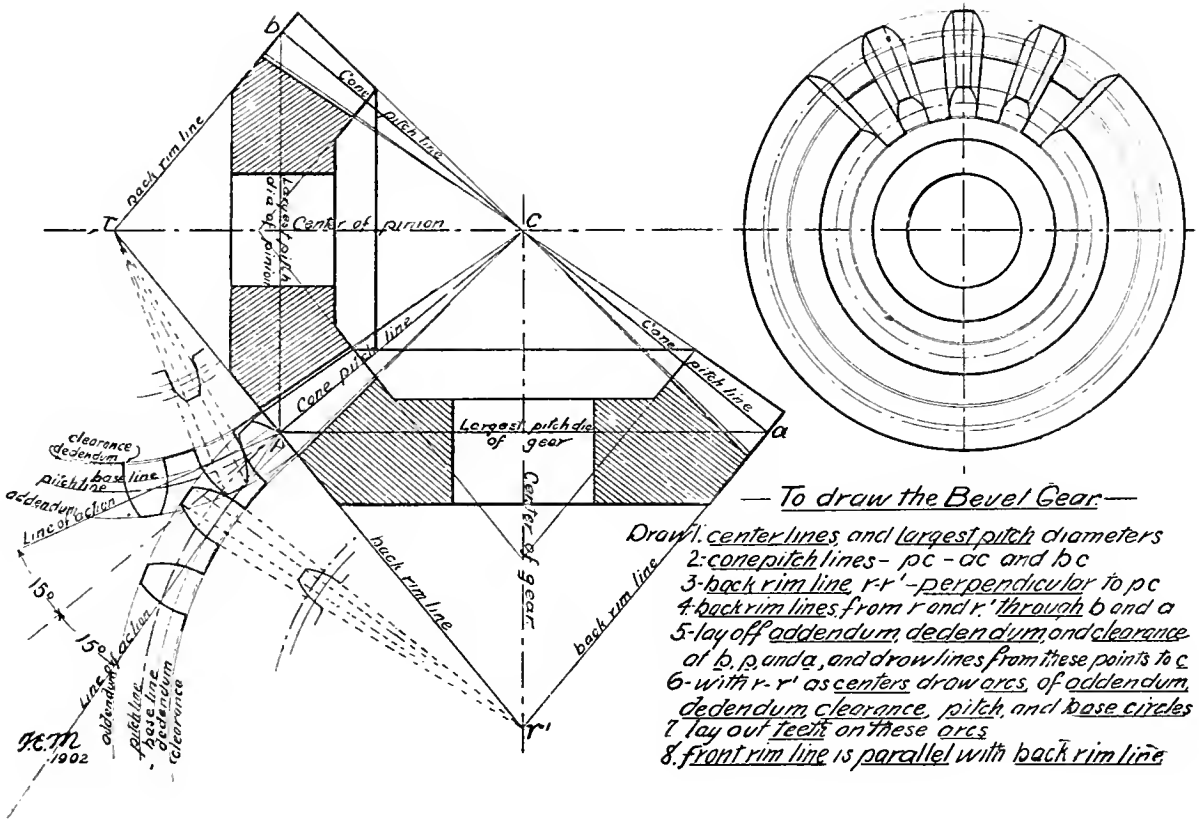

— To draw the Bevel Gear —

Draw 1. center lines and largest pitch diameters
2. cone pitch lines - pc - ac and bc
3. back rim line r-r' - perpendicular to pc
4. back rim lines from r and r' through b and a
5. lay off addendum, dedendum and clearance of b, p, and a, and draw lines from these points to c
6. with r-r' as centers draw arcs of addendum, dedendum, clearance, pitch, and base circles
7. lay out teeth on these arcs
8. front rim line is parallel with back rim line

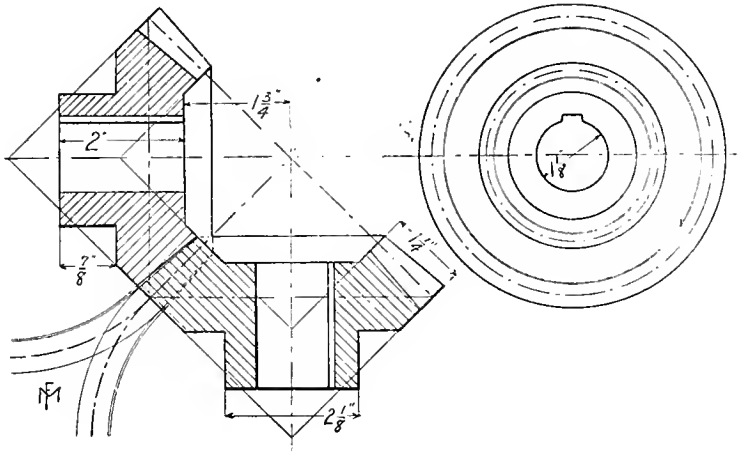

Prob. 7 Draw a pair of miter gears, 18th. 4 dia. pi. using the Grant Involute Odontograph.

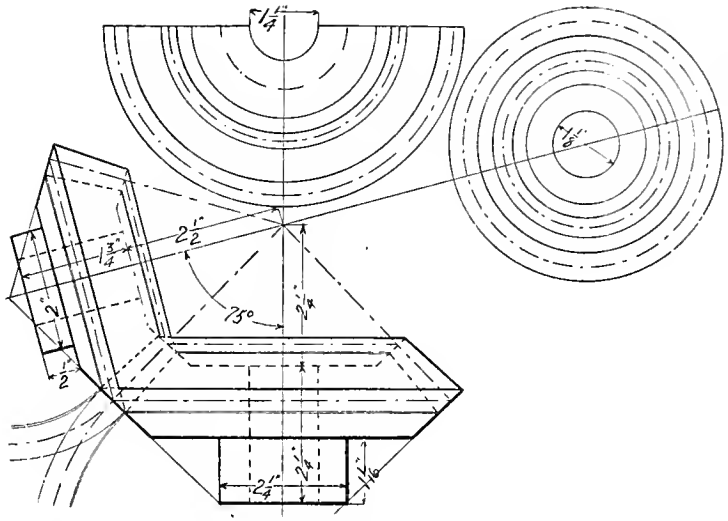

Prob. 8 Draw a pair of bevel gears, 22 and 16th., 4 dia. pi., shaft angle, 75°, using the Grant Involute Odontograph.

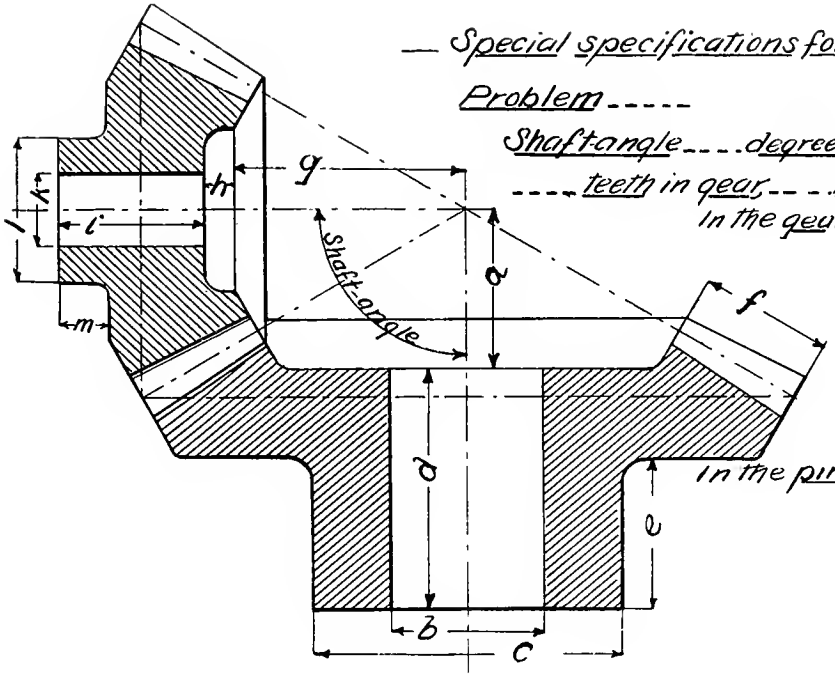

— Special specifications for Bevel Gears —

Problem _____

Shaft angle ____ degrees, _____ pitch

____ teeth in gear, ____ teeth in pinion

In the gear, let — a = _____
— b = _____
— c = _____
— d = _____
— e = _____
— f = _____
— h = _____

In the pinion, let — q = _____
— h = _____
— i = _____
— k = _____
— l = _____
— m = _____

MECHANICAL DRAWING MECHANIC ARTS HIGH SCHOOL

Record of .....

Class Div. Sept. 190 — June 190

Plates required	Exercise.	Page.	Finished.	Due.	Mark	Supplementary Plates.	Exercise	Page	Finished.	Mark	Date of Test.	Mark on Test.
1						1						
2						2						
3						3						
4						4						
5						5						
6						6						
7						7						
8						8						
9						9						
10						10						
11						11						
12						12						
13						13						
14						14						
15						15						
16						16						
17						17						
18						18						
19						19						
20						20						
21						21						
22						22						
23						23						
24						24						
25						25						
26						26						
27						27						
28						28						
29						29						
30						30						

3 1904

LIBRARY OF CONGRESS
0 019 971 091 6